FORCE OF BRICKS | DESIGN IN BRICKS

© ALL RIGHTS RESERVED | FORCE OF BRICKS 2020

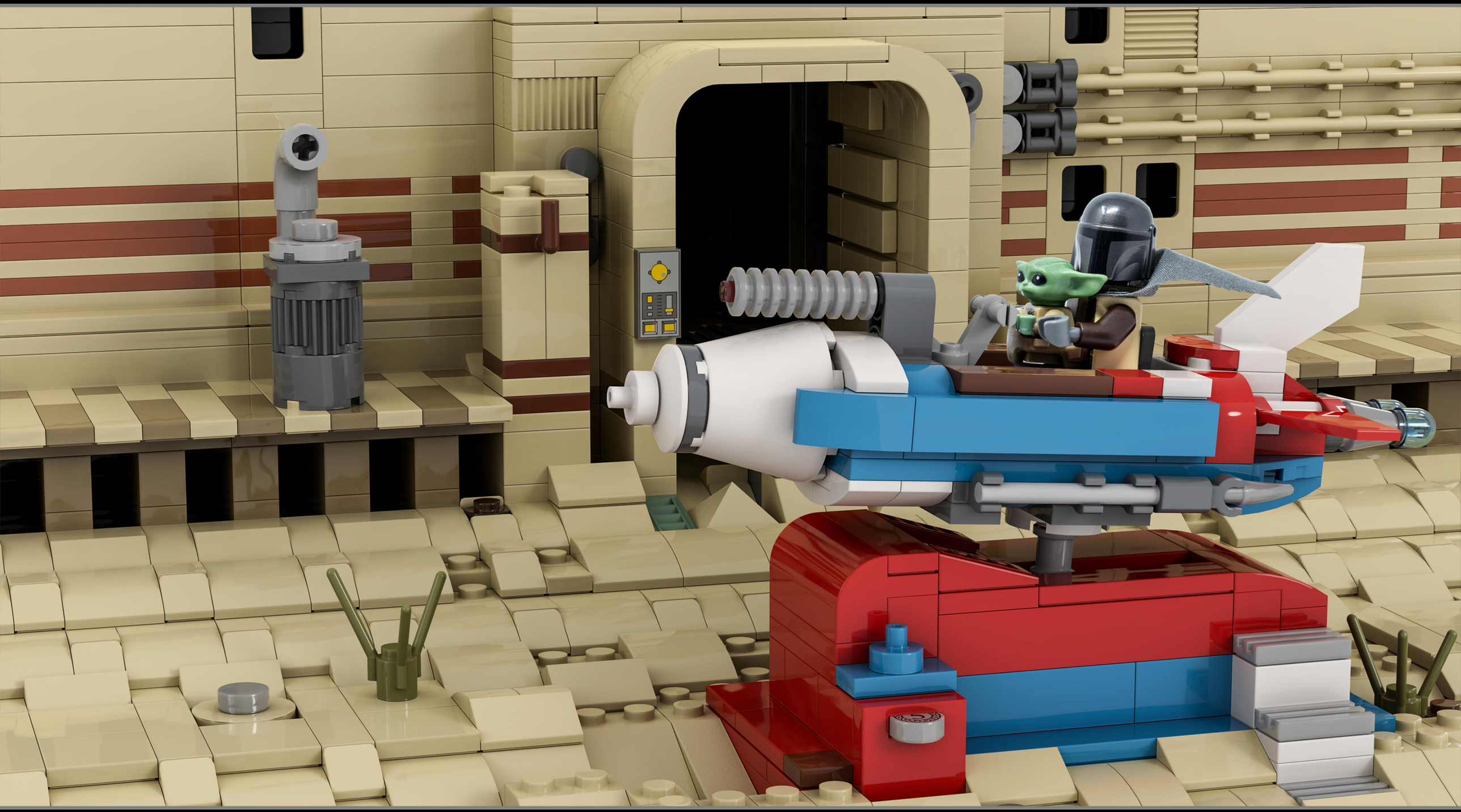

FOBSWM004 | MINI MANDO SPACE PATROL

180+ PIECES

FORCE OF BRICKS DESIGN IN BRICKS

DAVID STRENZLER | CUSTOM MODEL DESIGNS

MY SERVICES FOR YOU

Custom LEGO model designs
Digital model and instructions design
In Lego® Bricklink's Studio 2.0 & Adobe Photoshop CC

Fully customized sets
Printed instructions, Lego® bricks, box

High quality custom LEGO instructions
Based on my individual project work, available on Rebrickable
rebrickable.com/users/Force%20of%20Bricks/mocs/

Are you interested in having your own unique idea of a model made of LEGO® bricks realized?
Then do not hesitate to contact Force of Bricks!

info@forceofbricks.de
facebook.com/fobricks
instagram.com/forceofbricks/
flickr.com/people/forceofbricks/

© ALL RIGHTS RESERVED | FORCE OF BRICKS 2020

1

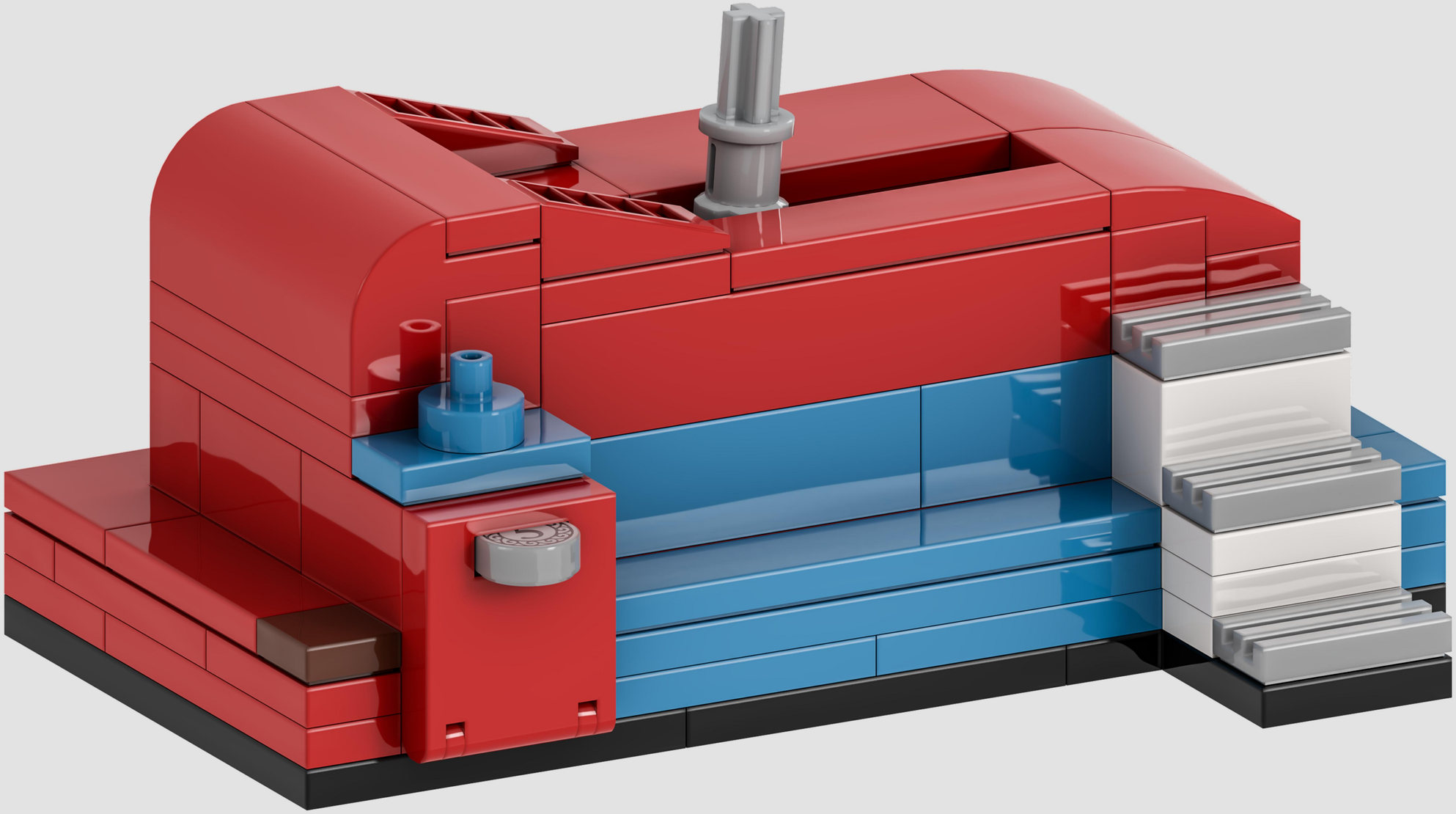

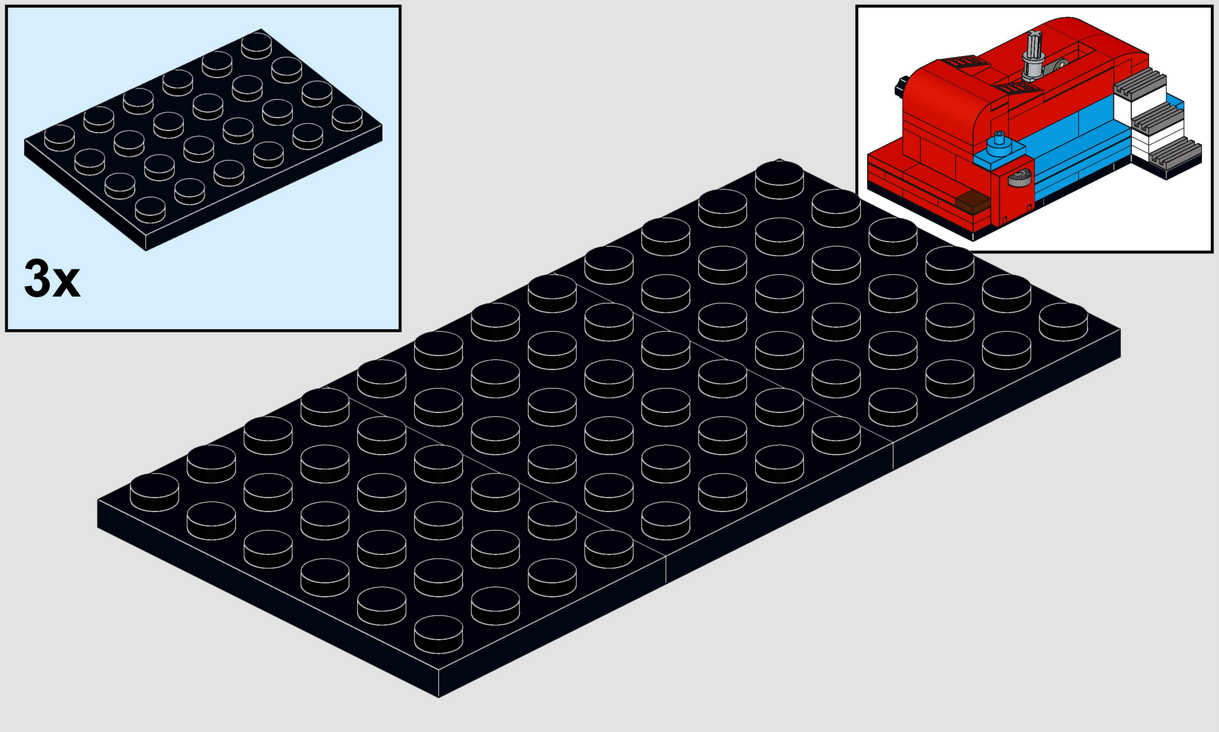

1

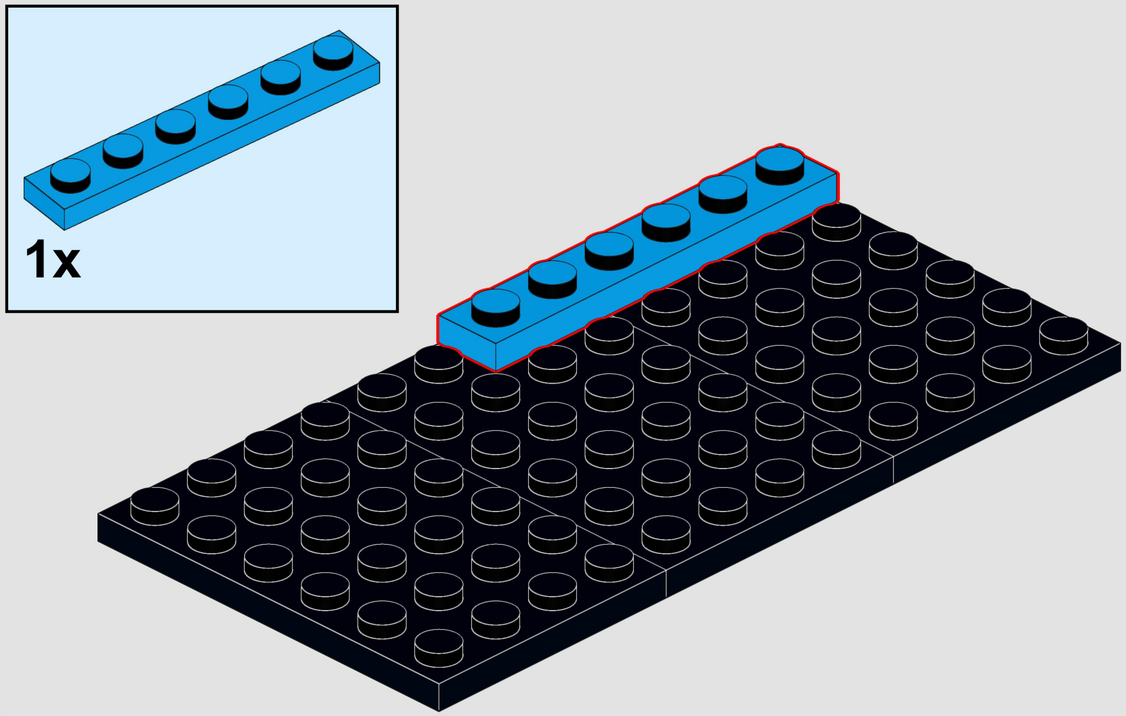

2

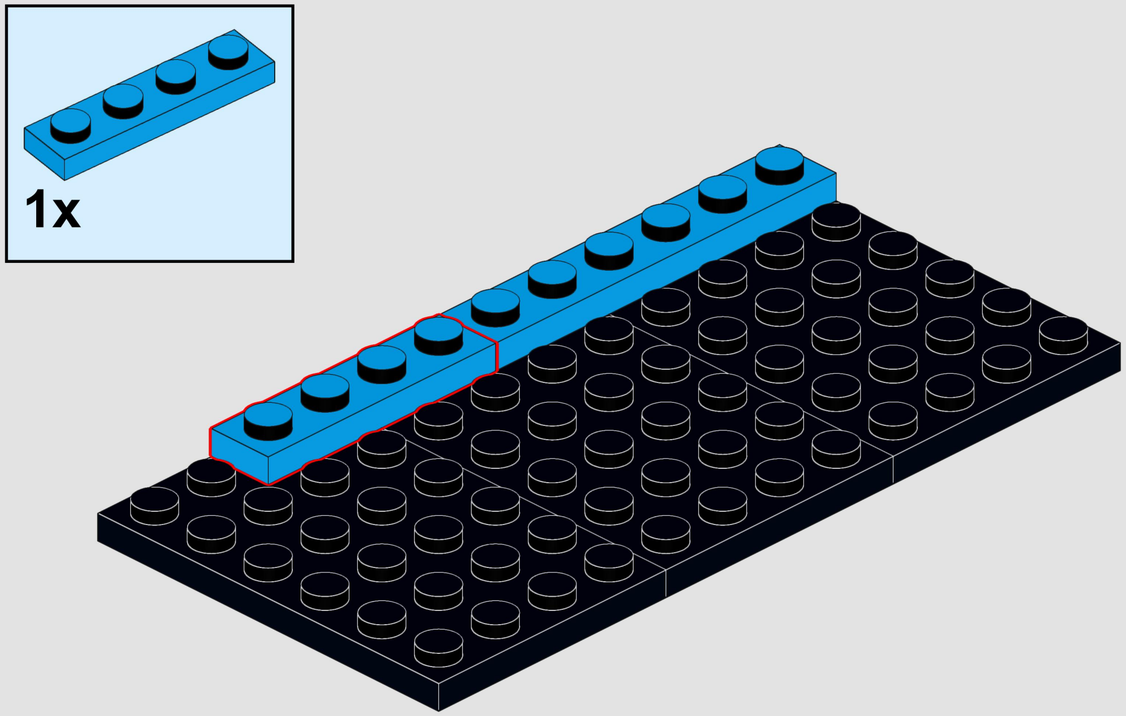

3

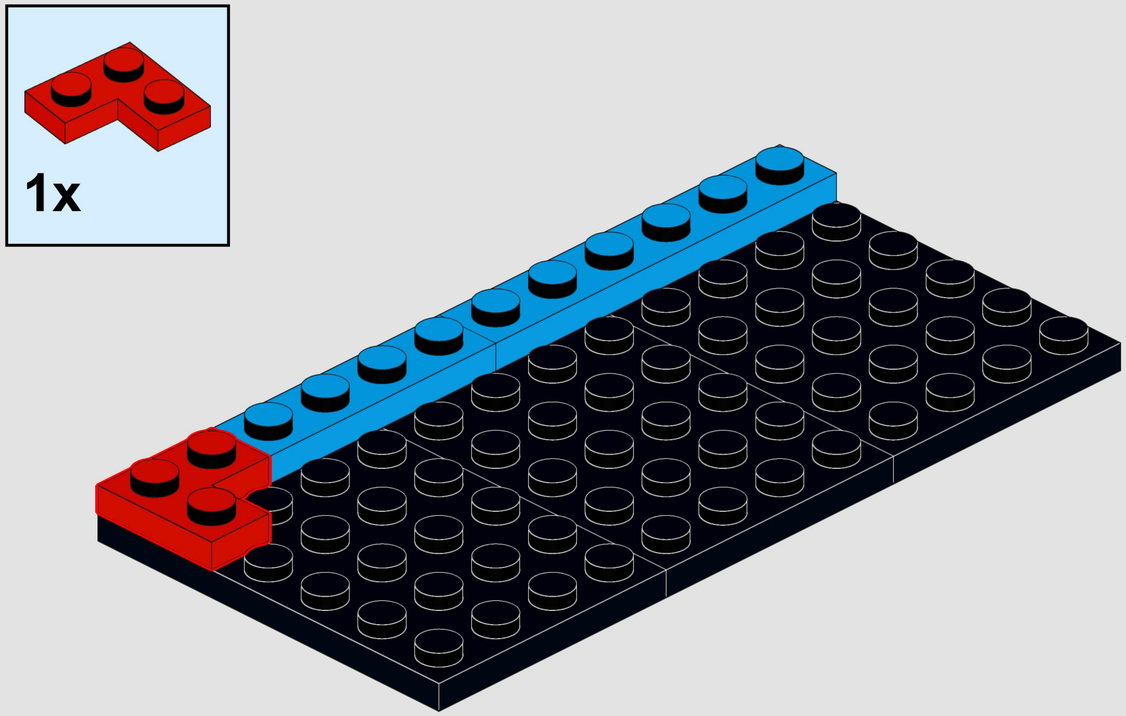

4

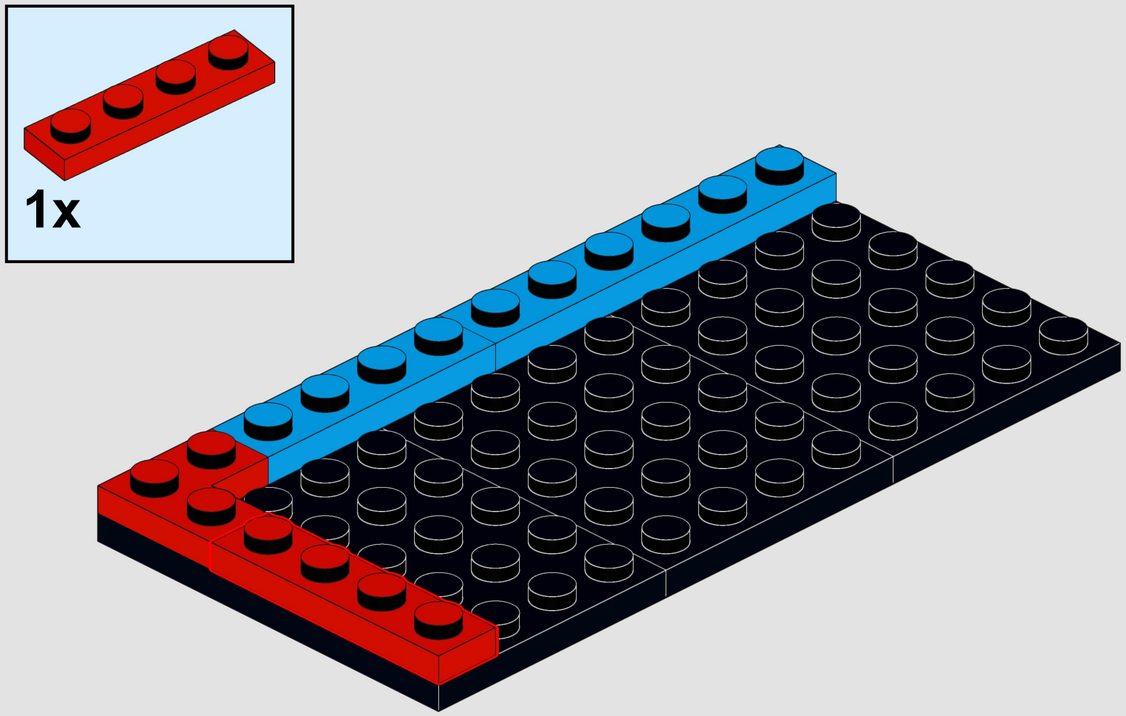

5

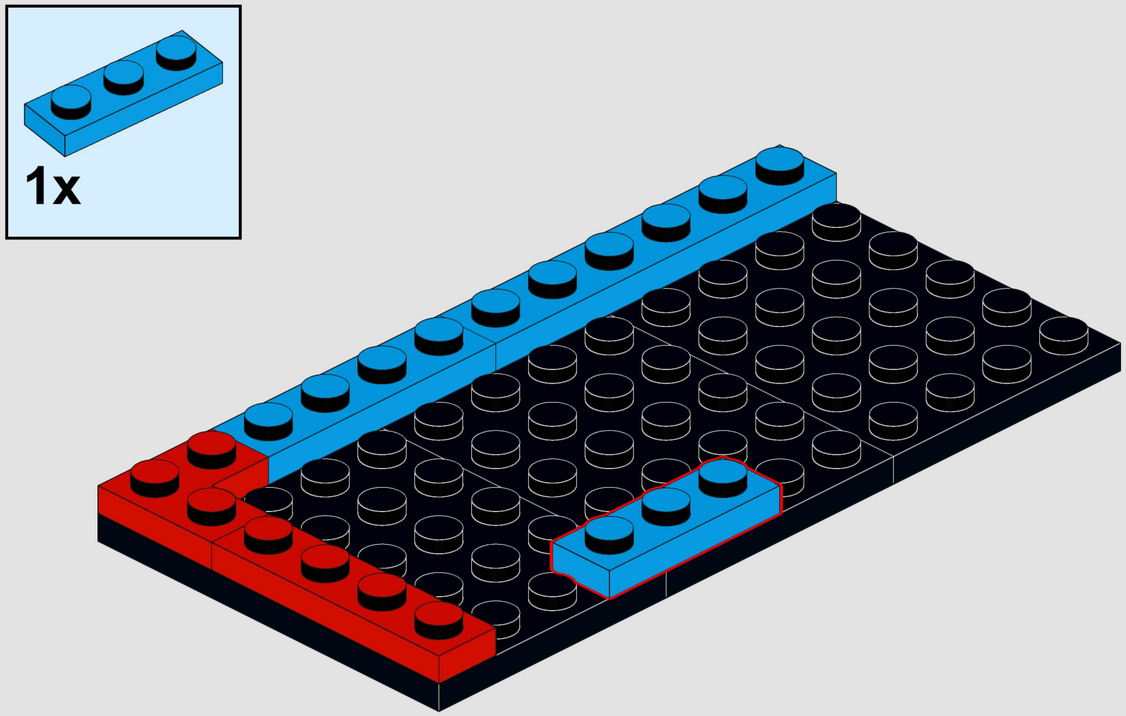

6

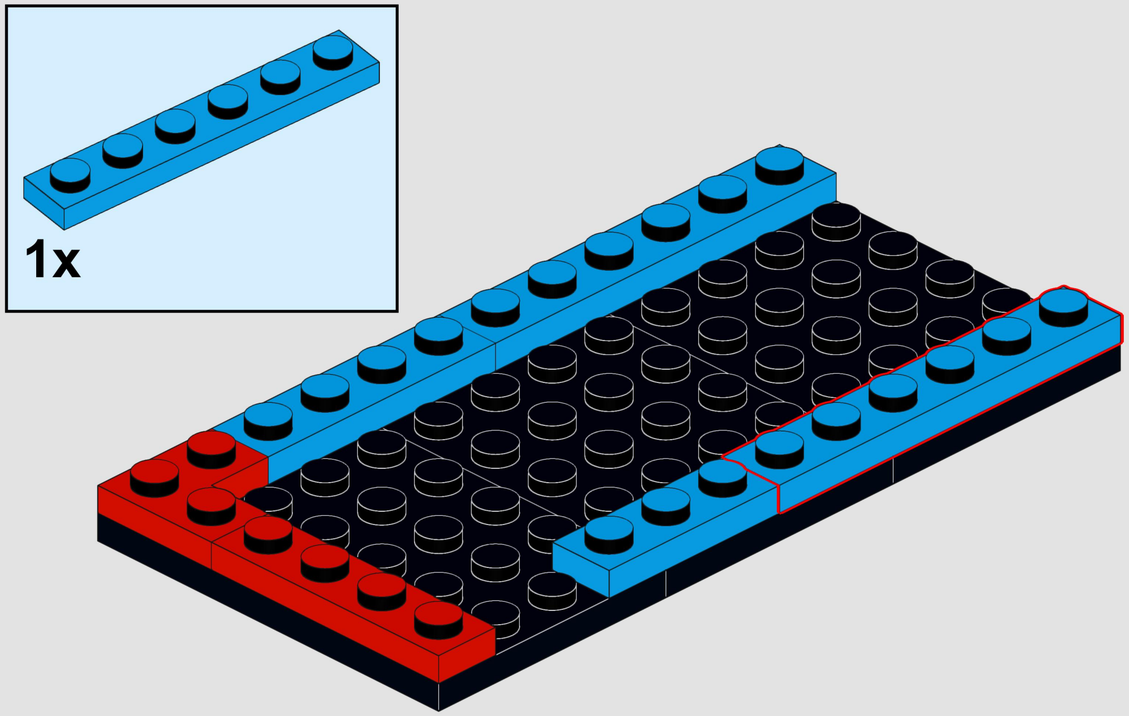

7

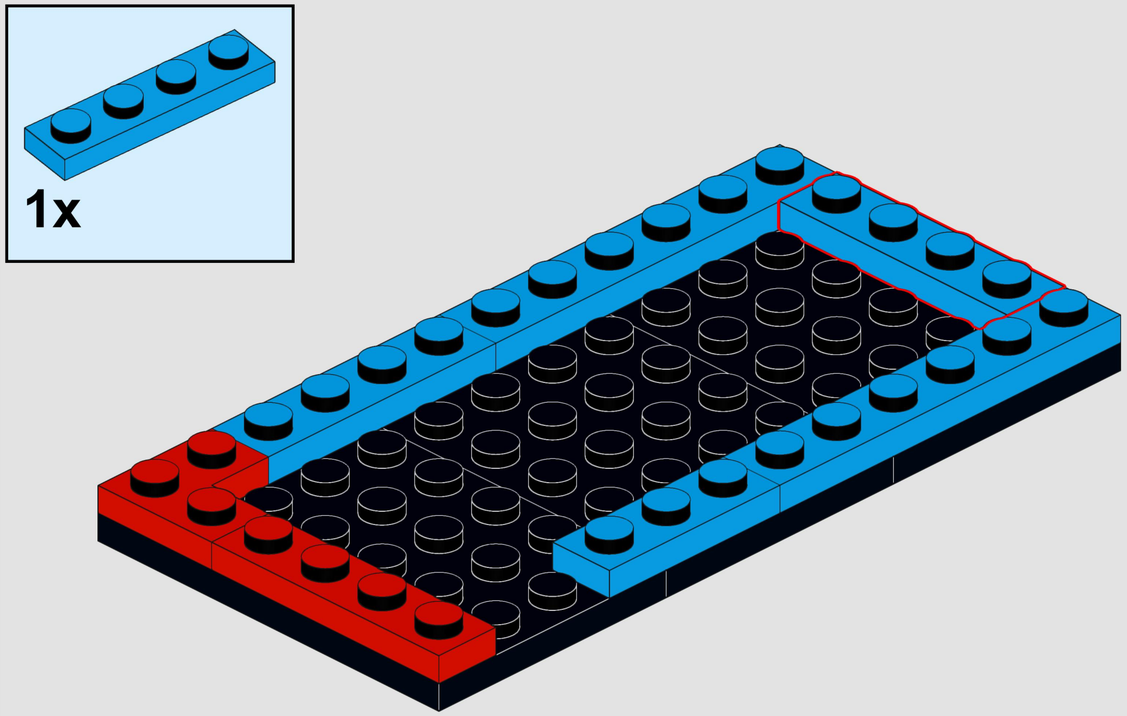

8

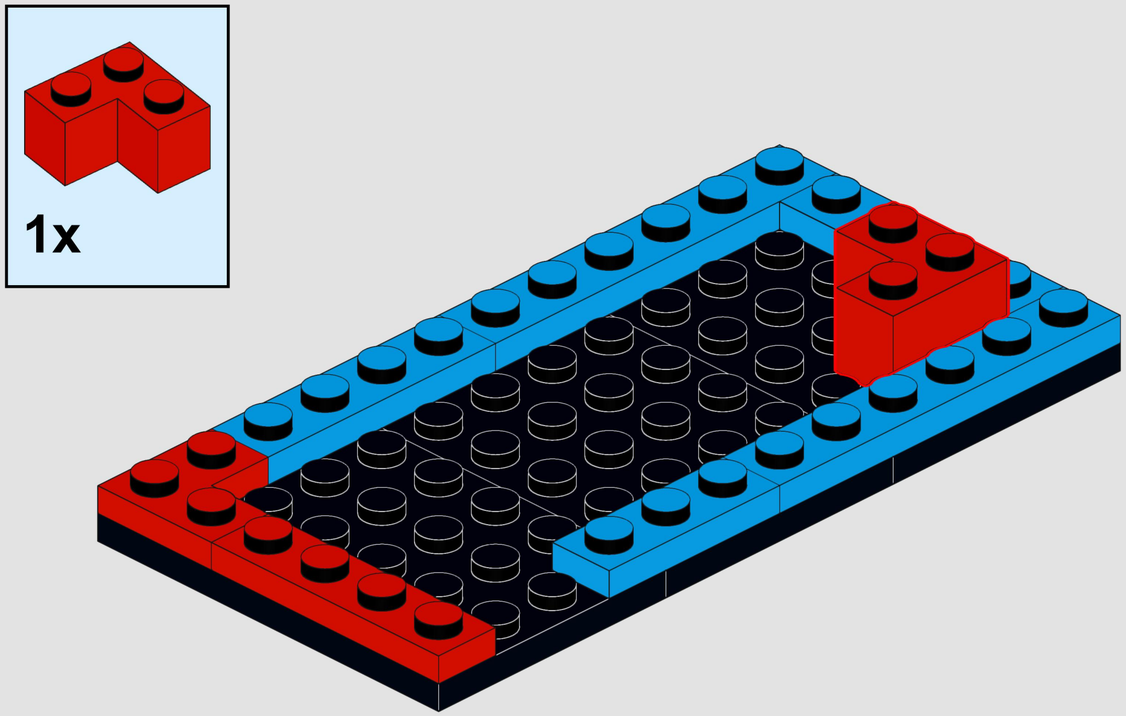

9

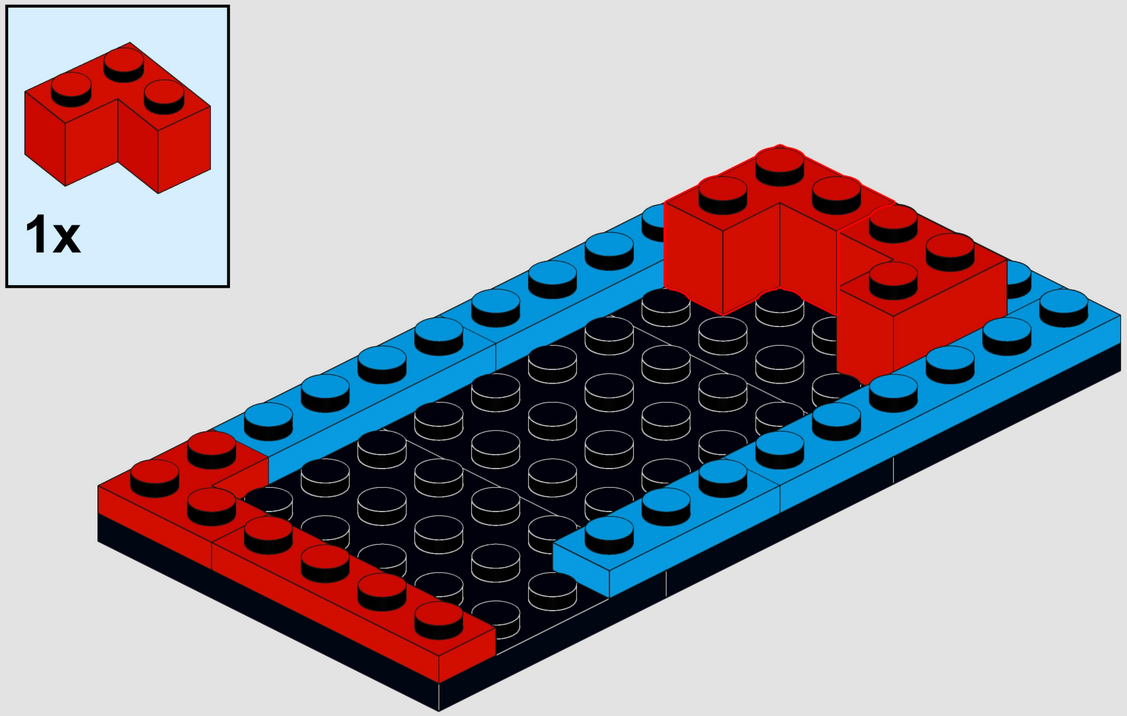

10

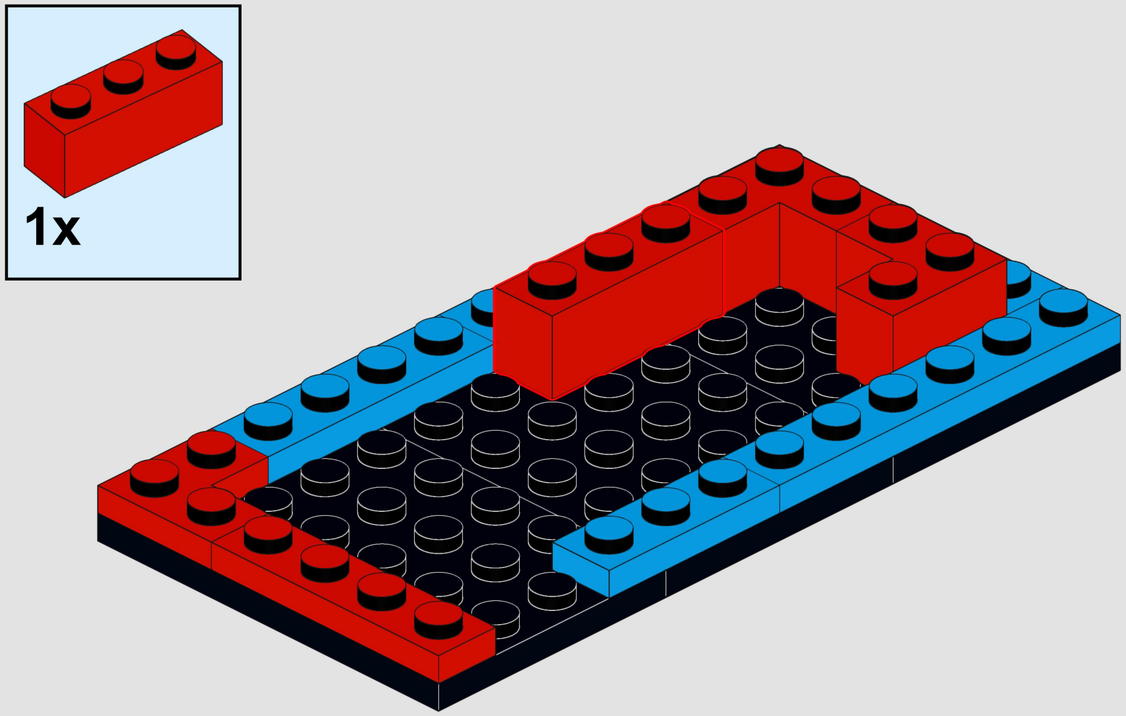

11

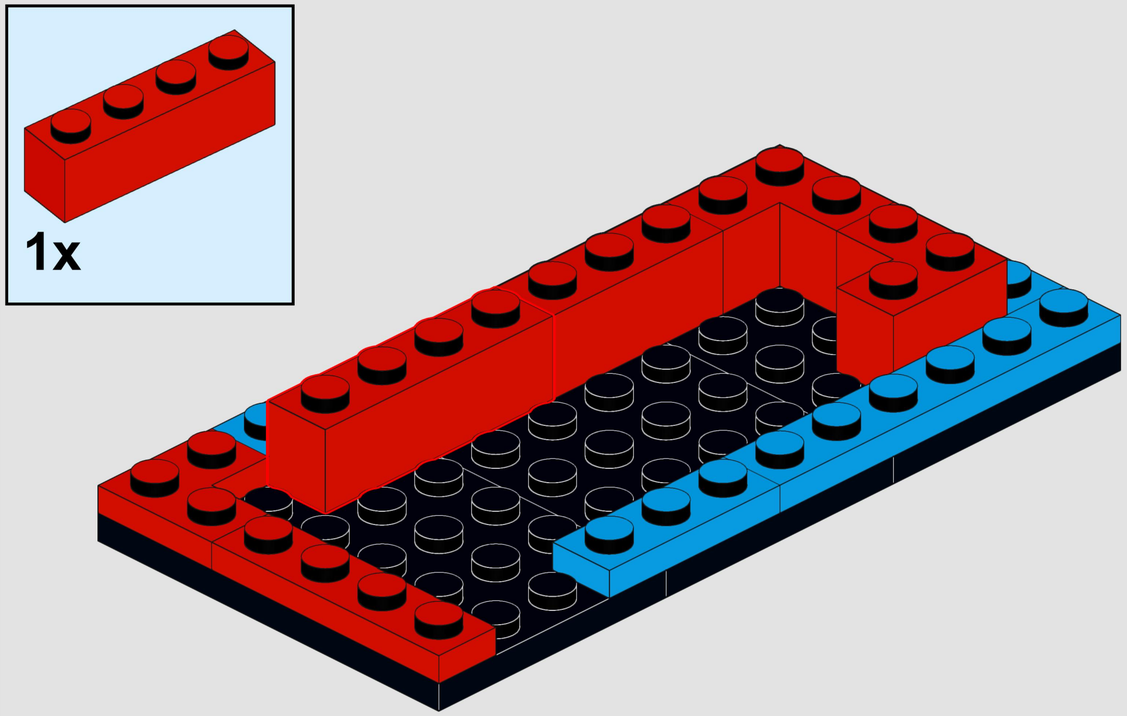

12

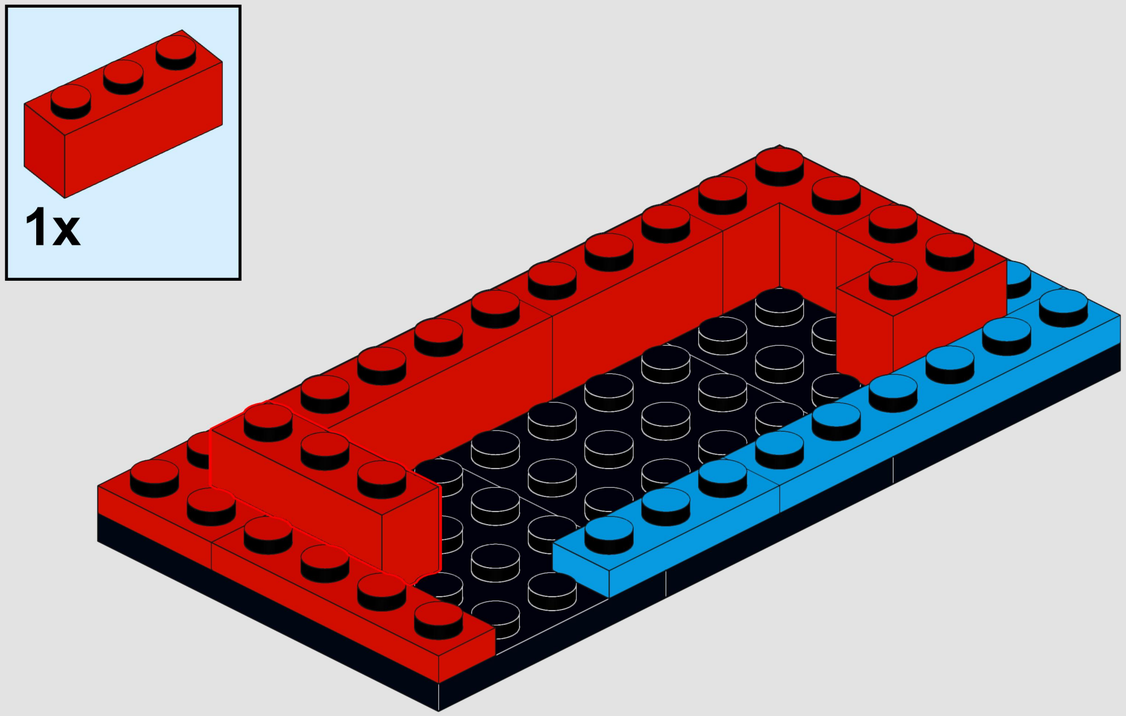

13

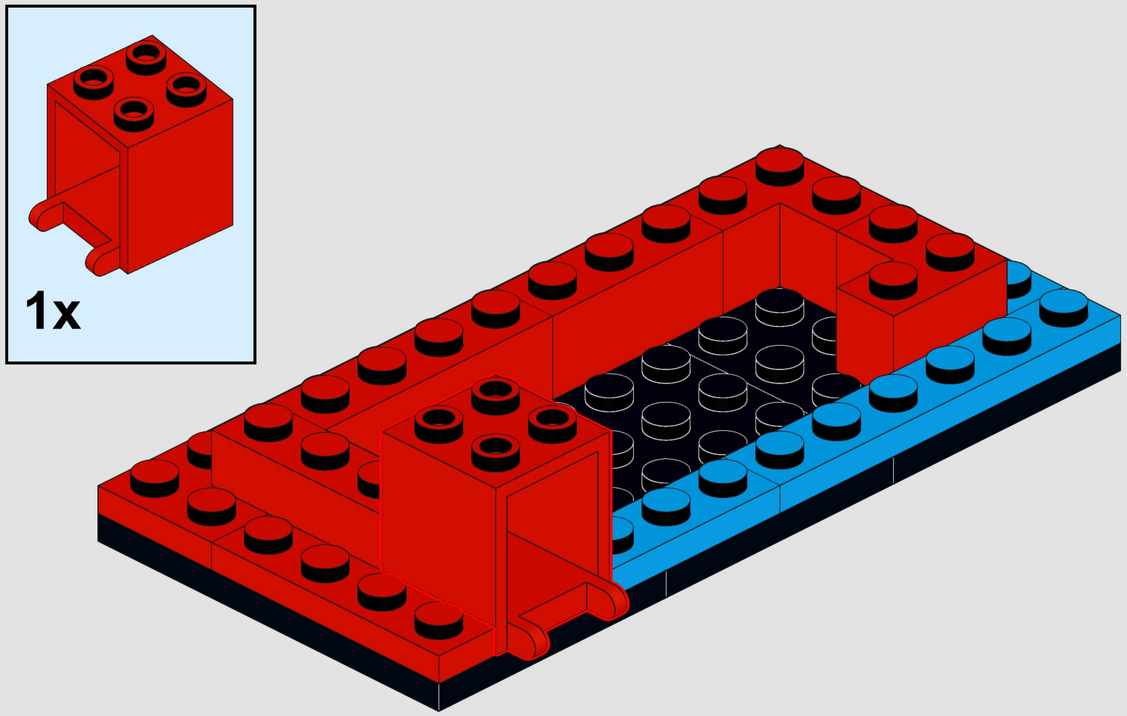

14

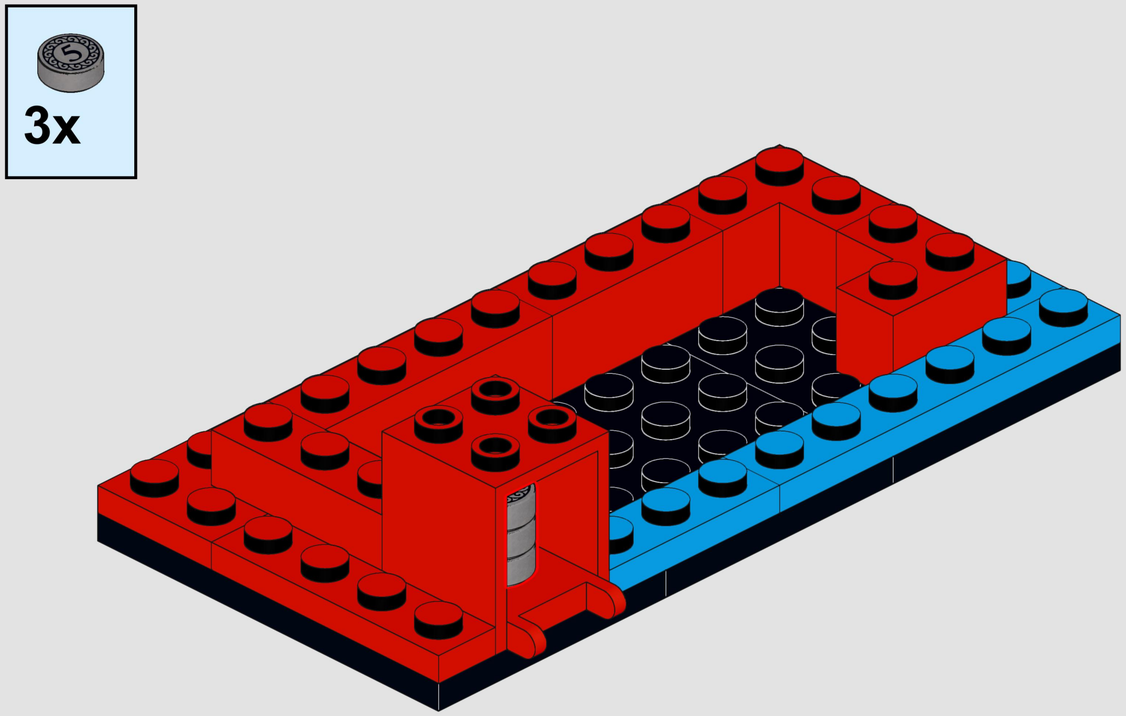

15

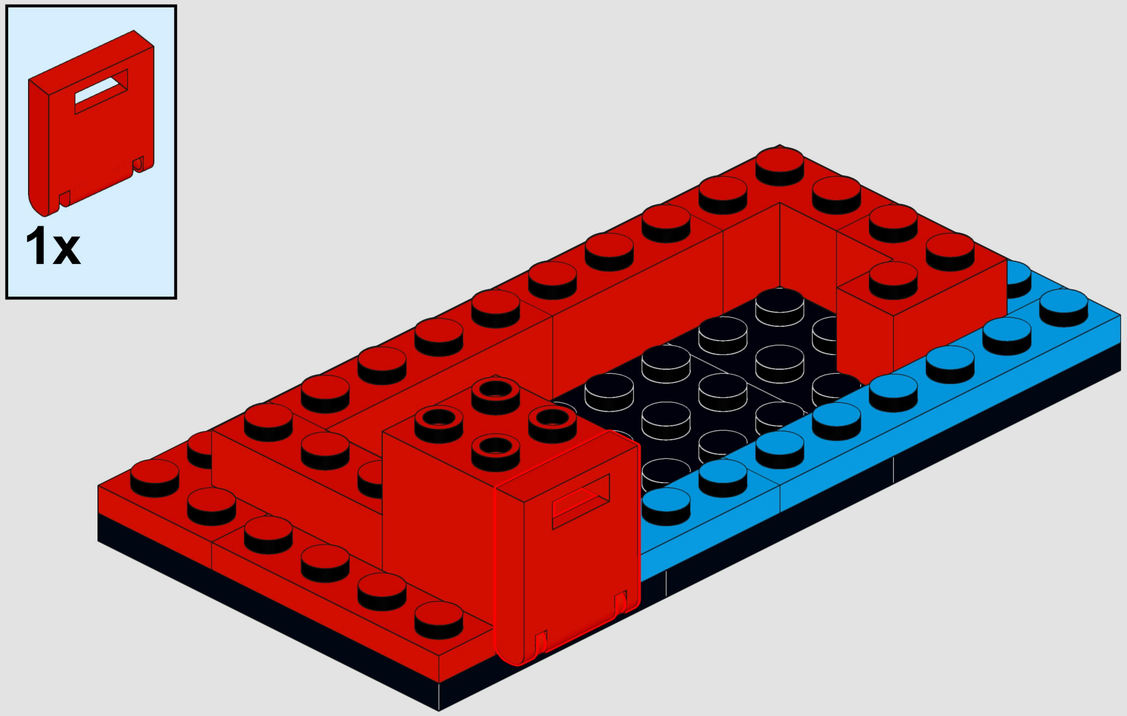

16

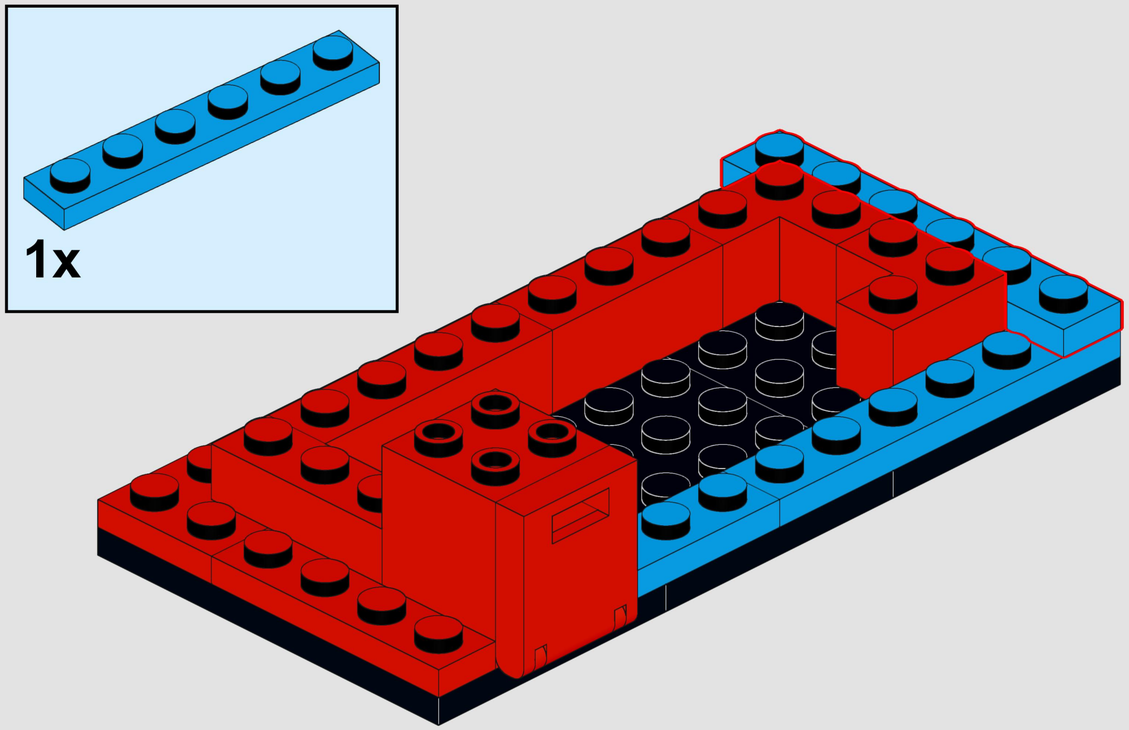

17

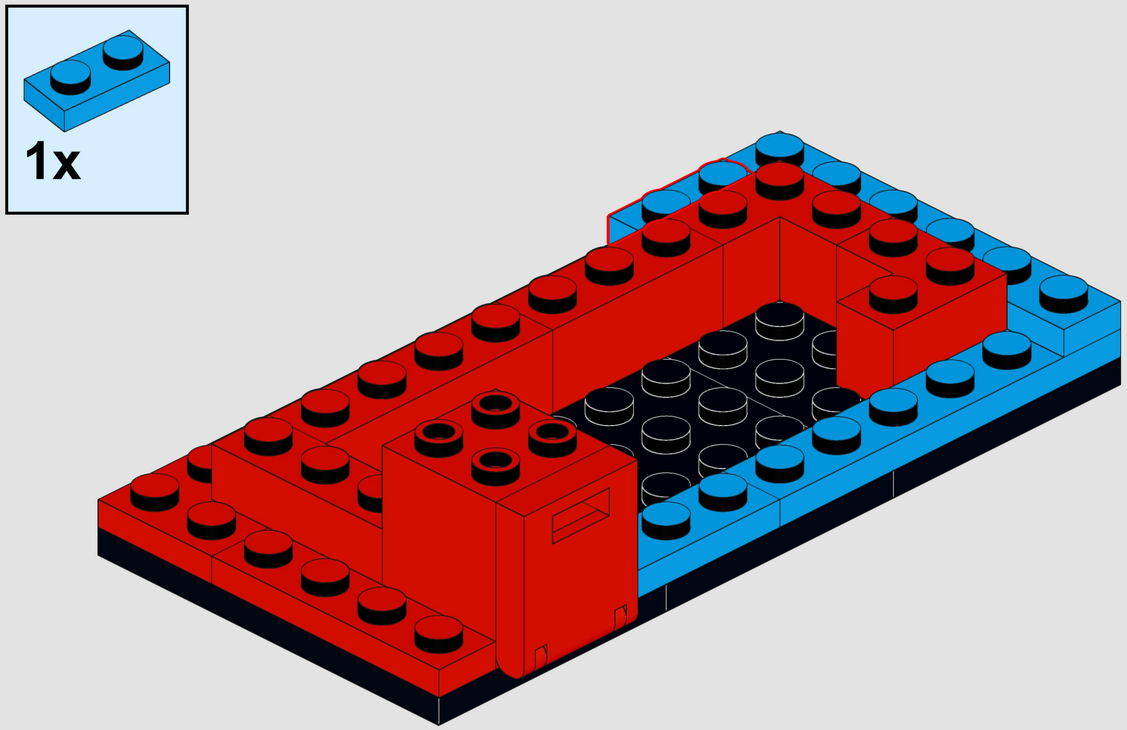

18

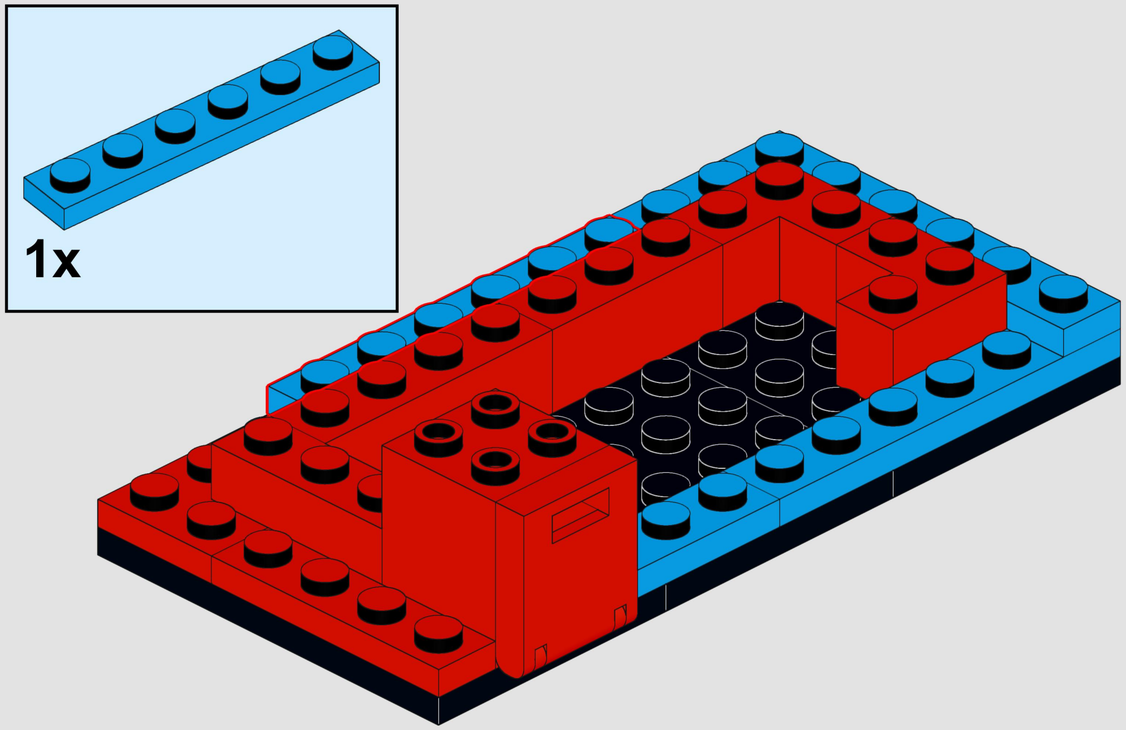

19

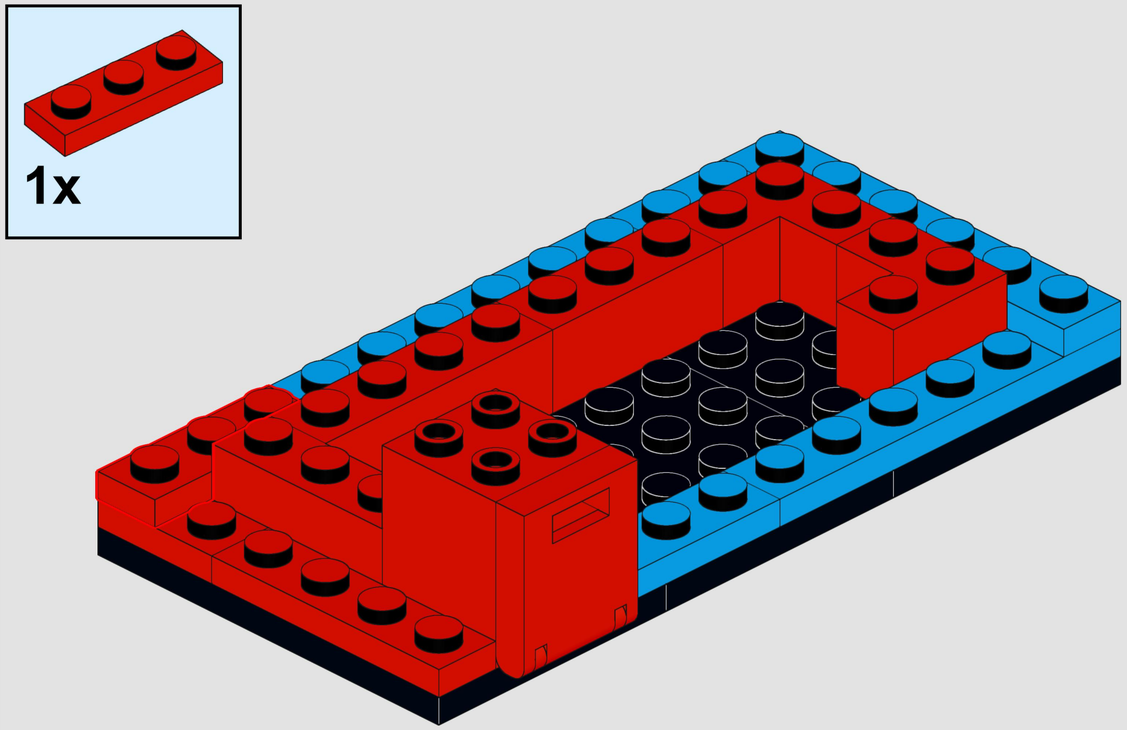

20

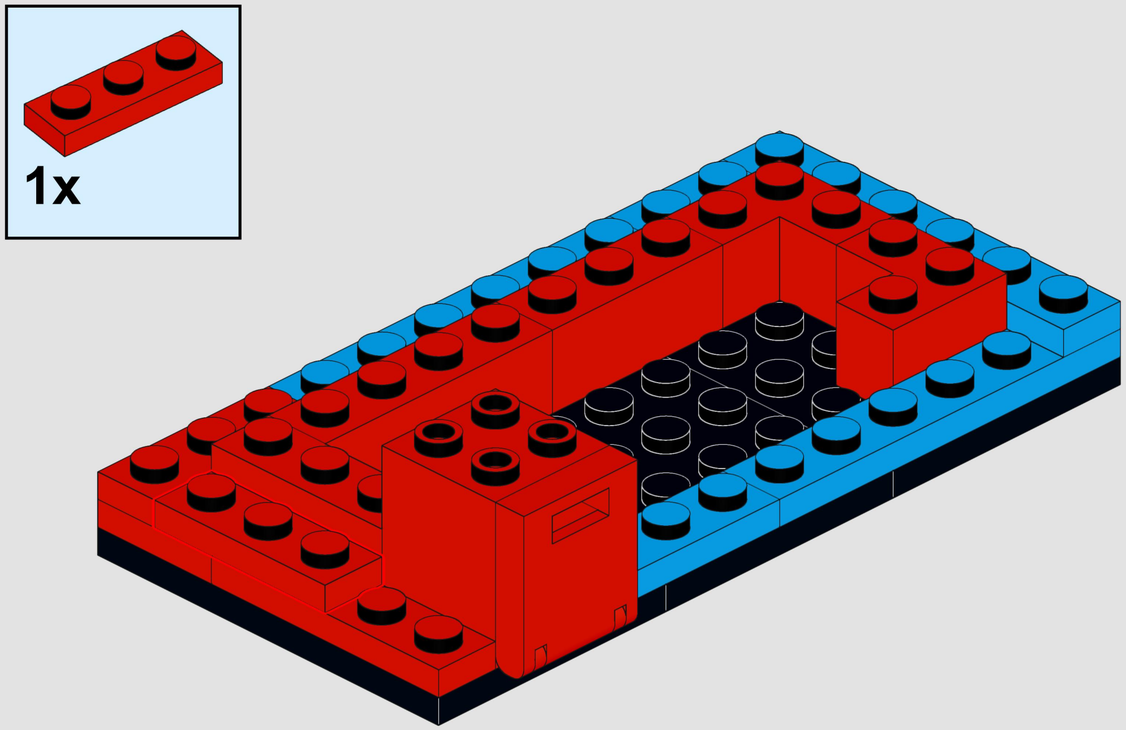

21

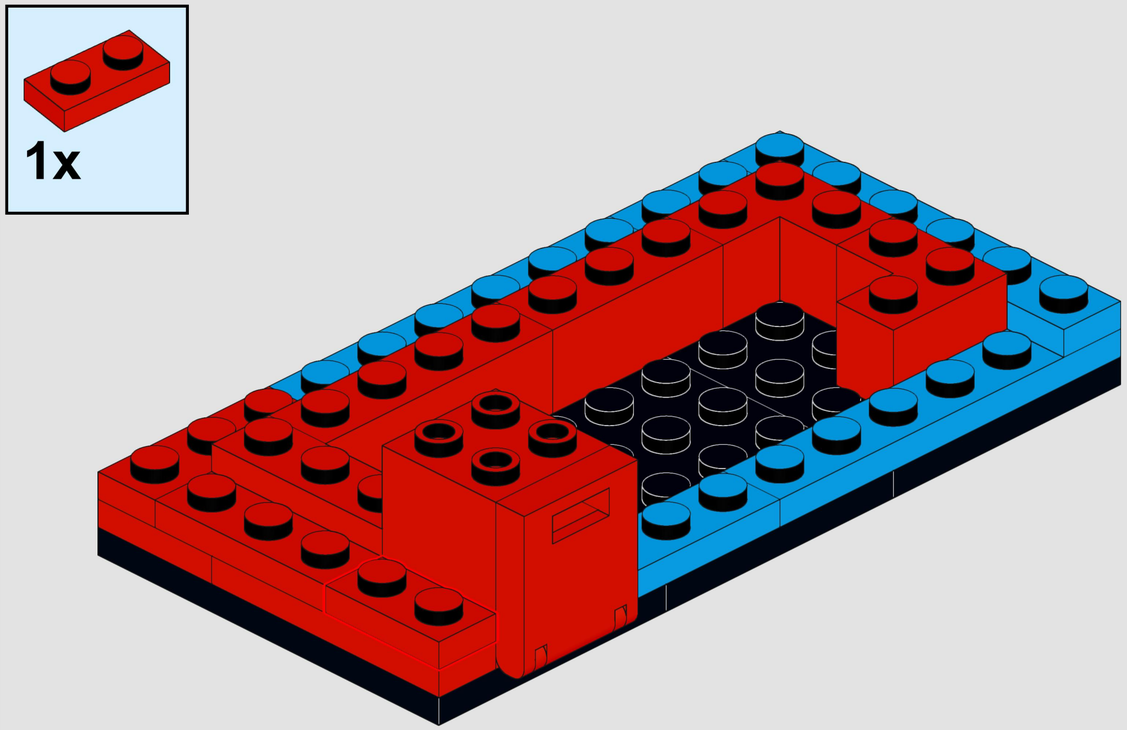

22

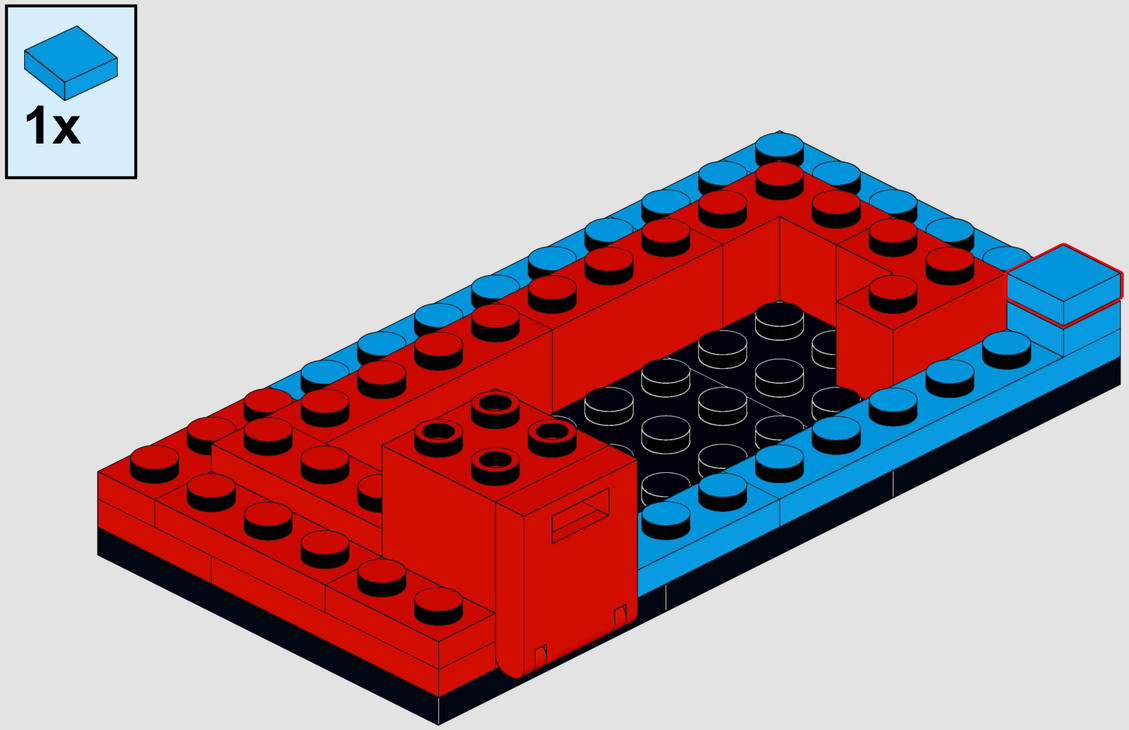

23

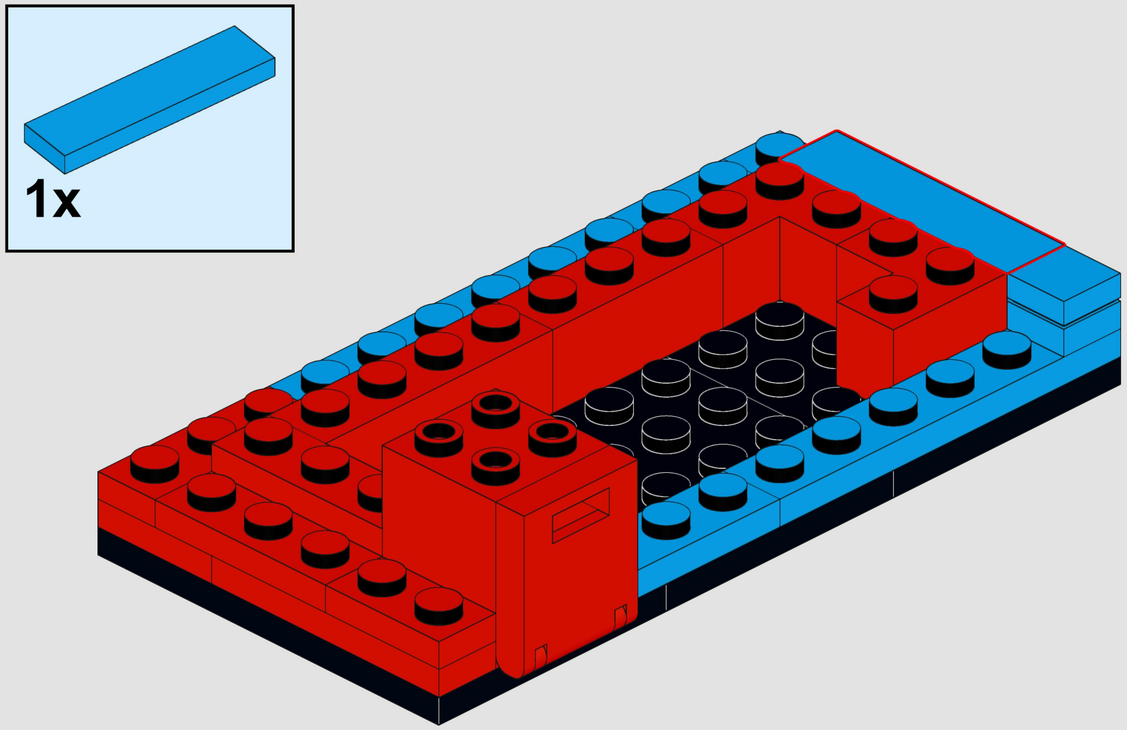

24

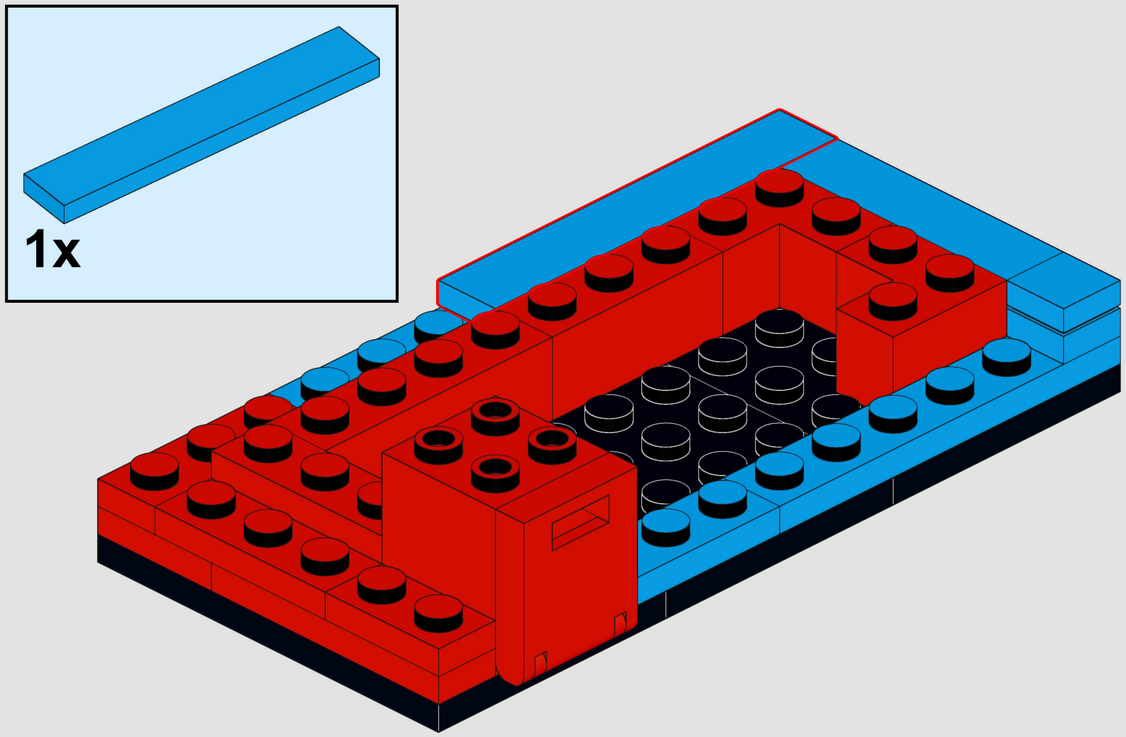

25

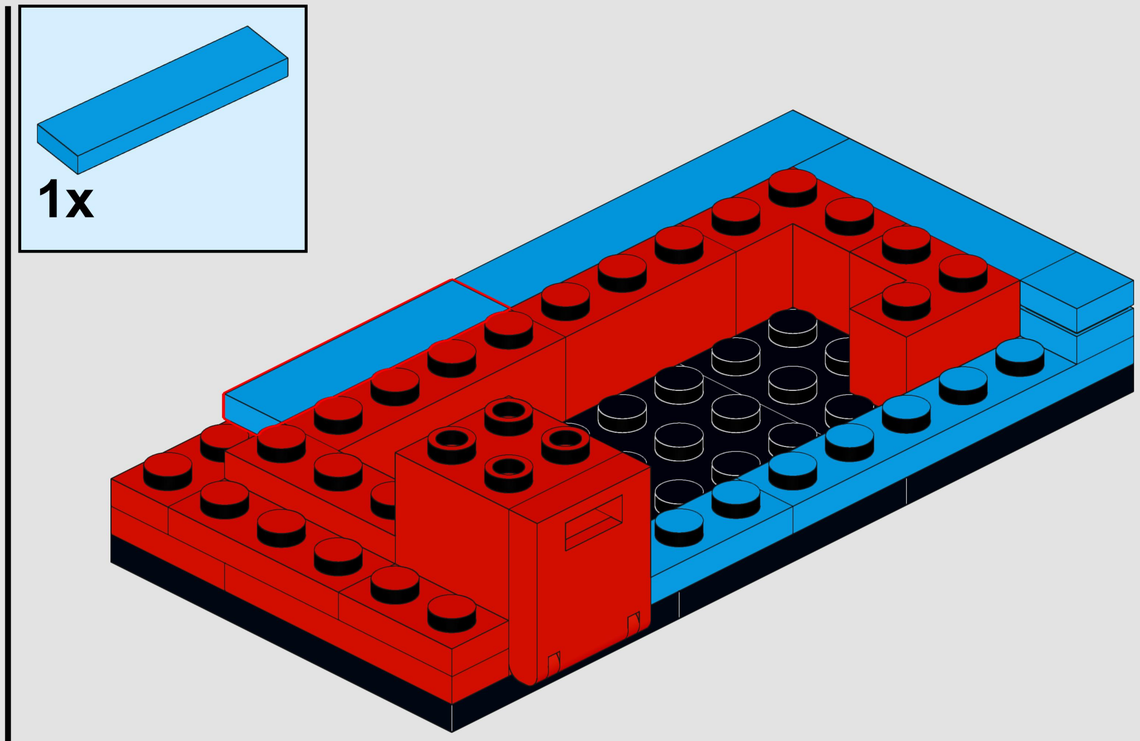

26

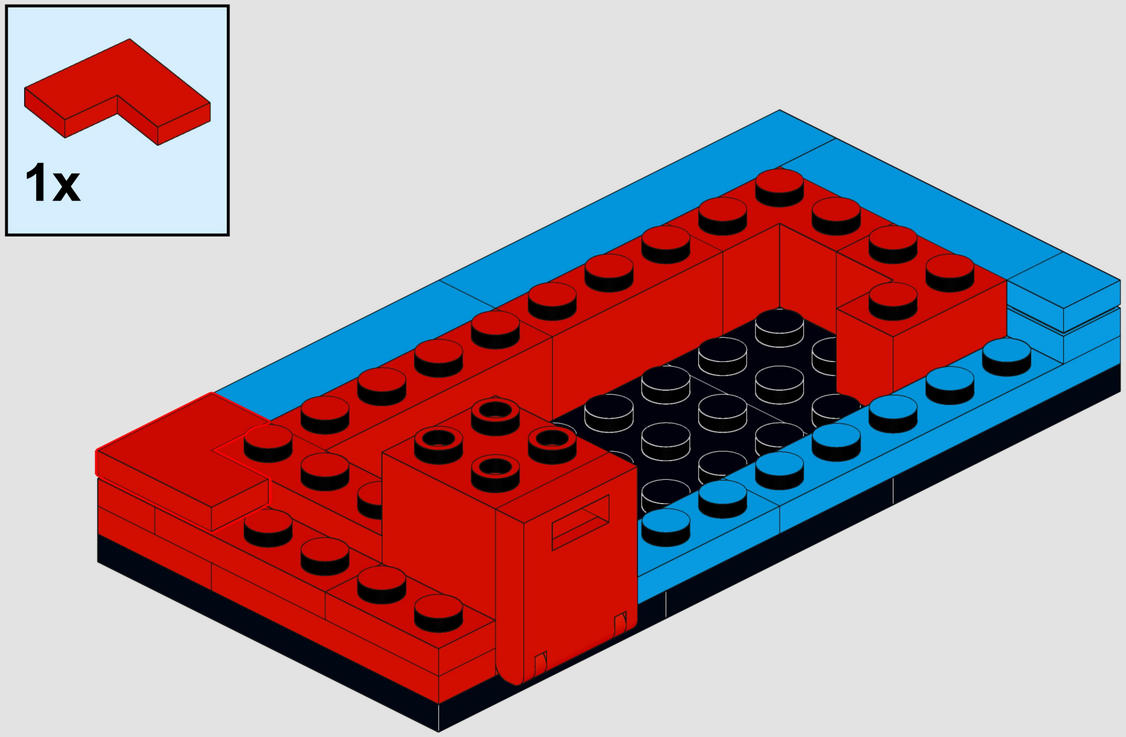

27

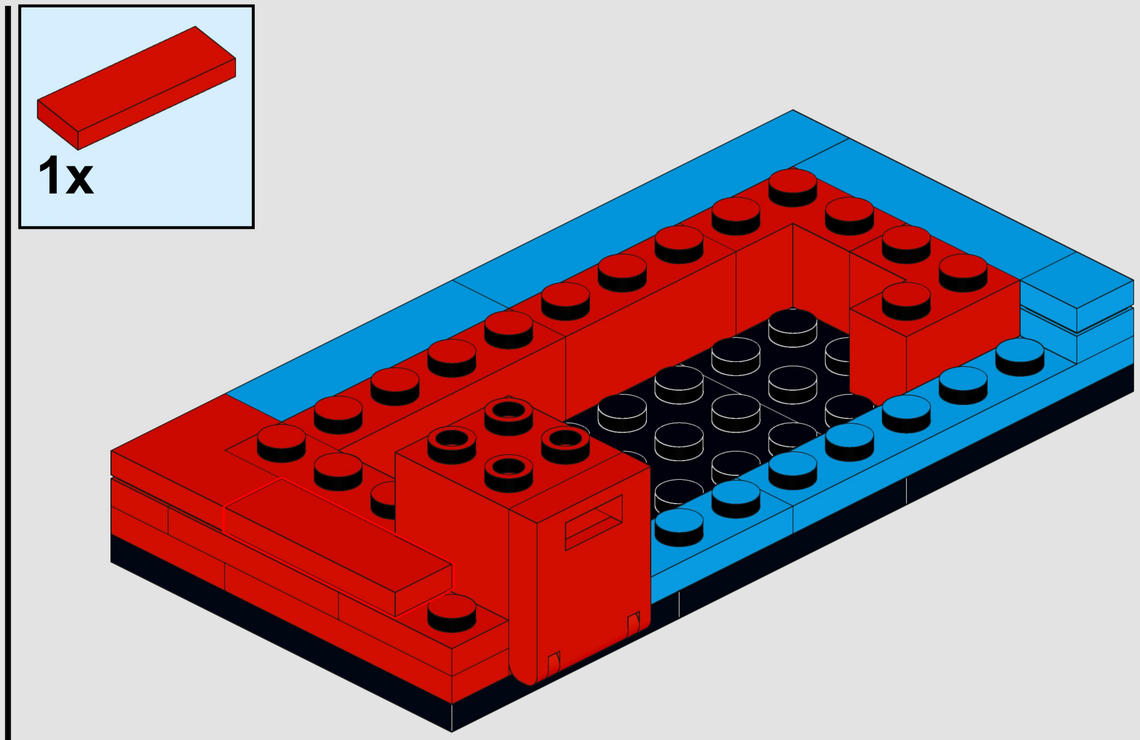

28

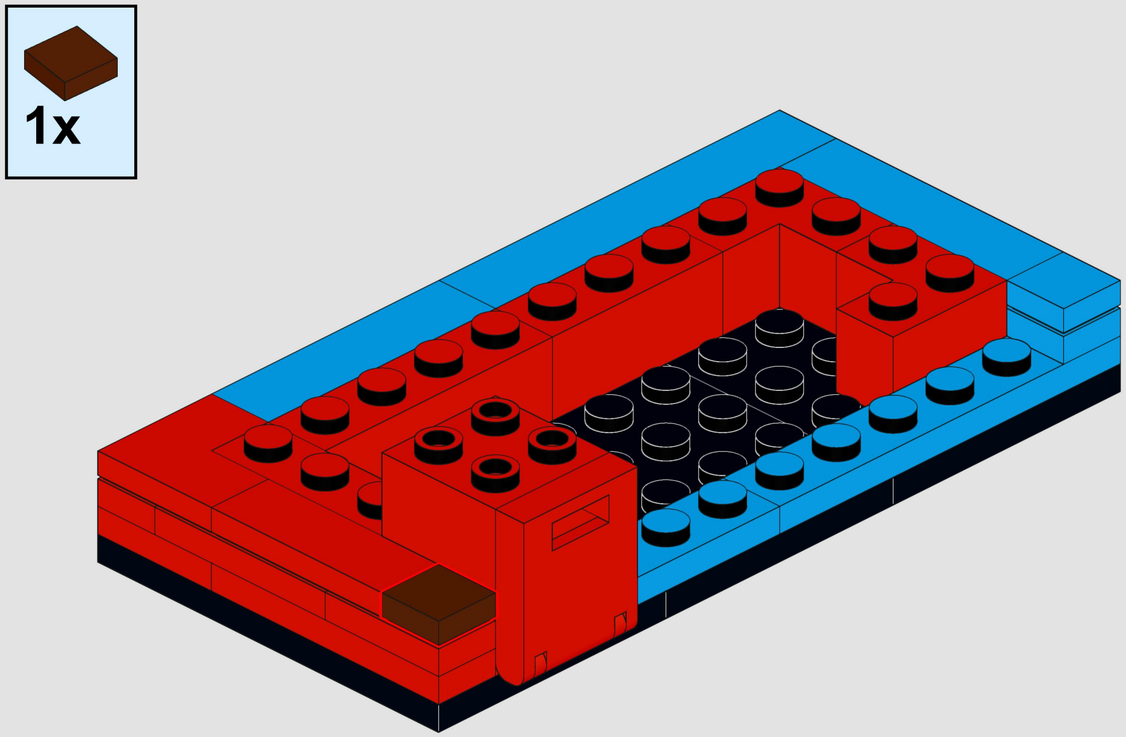

29

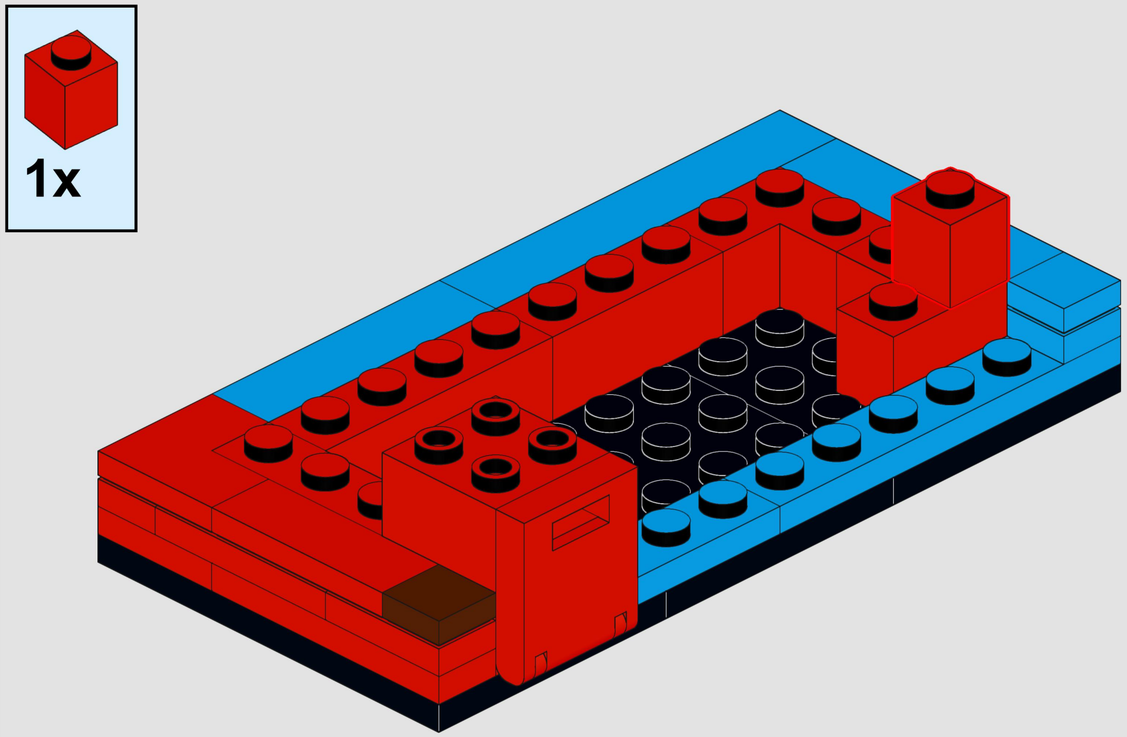

30

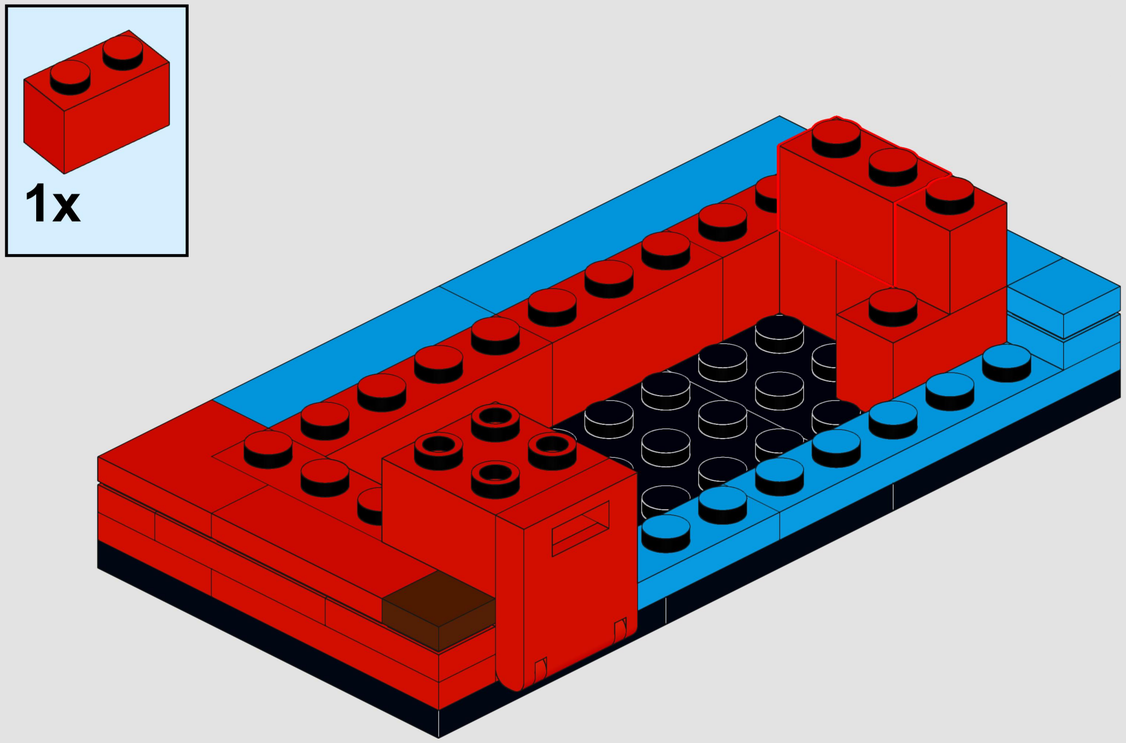

31

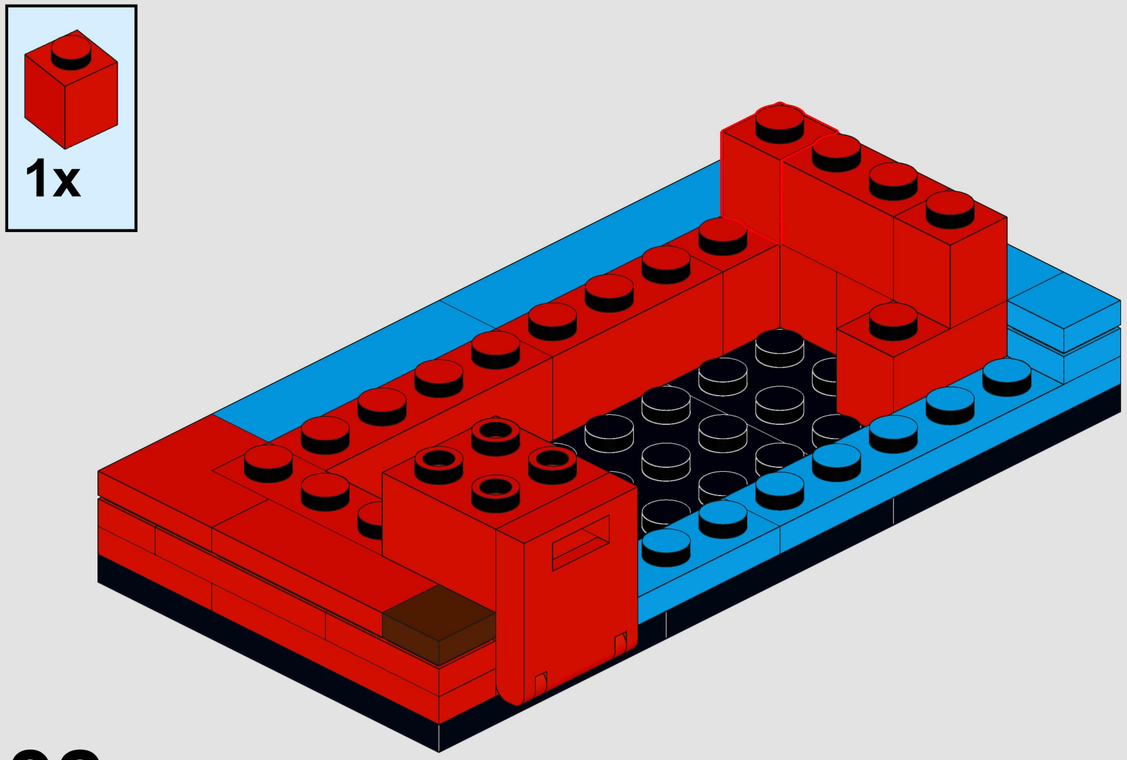

32

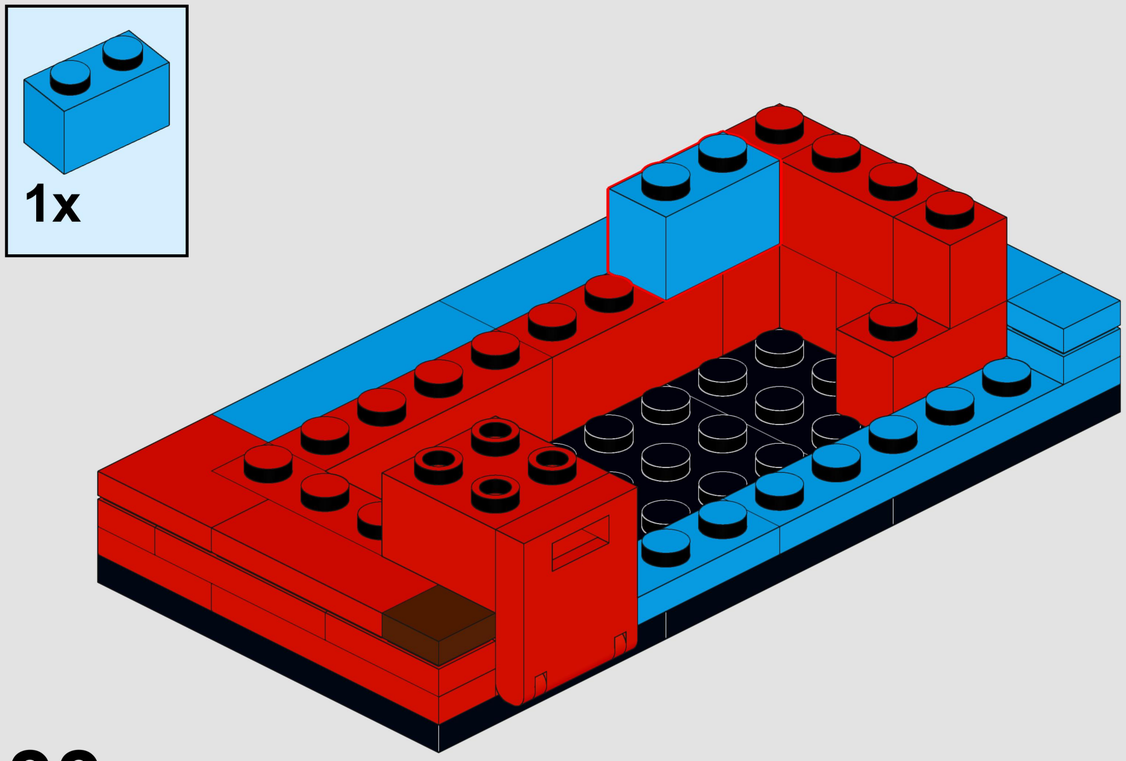

33

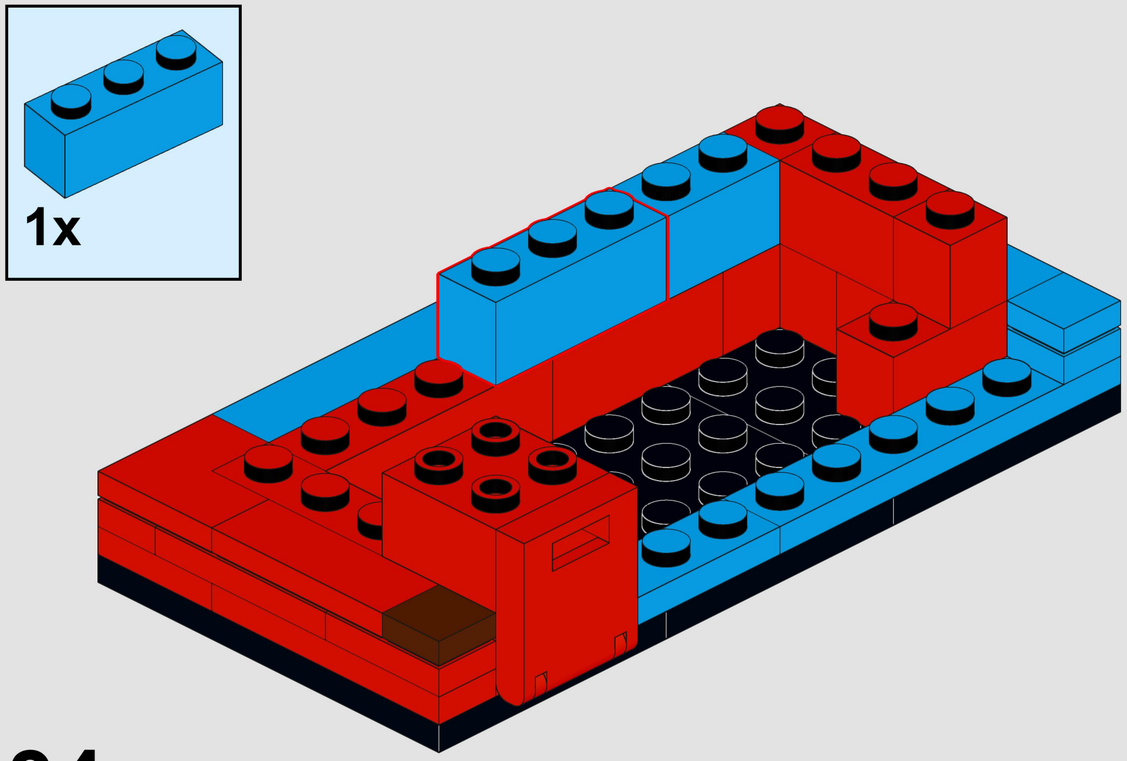

34

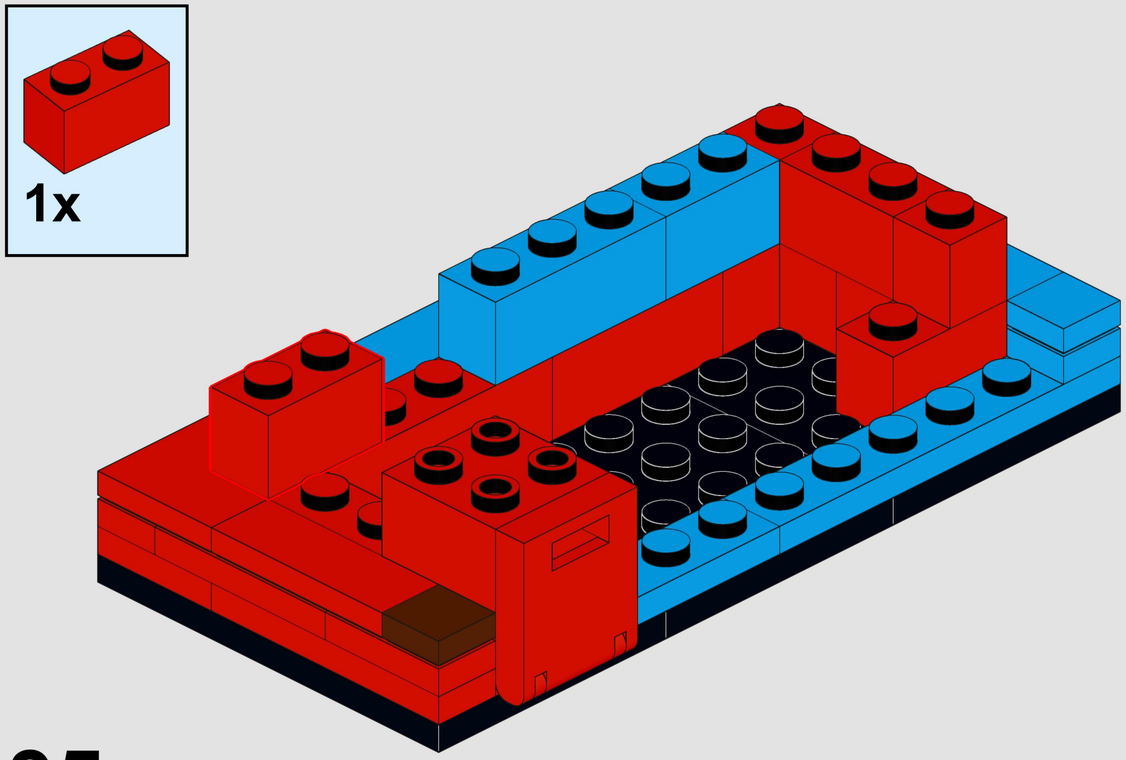

35

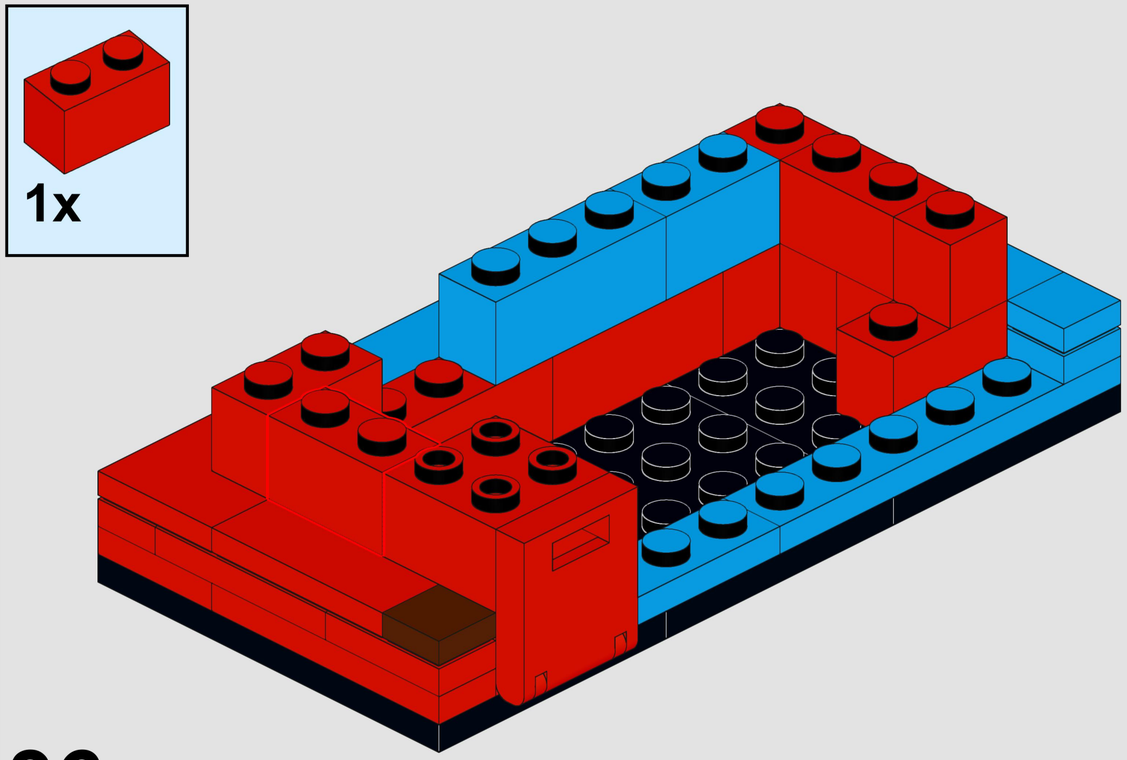

36

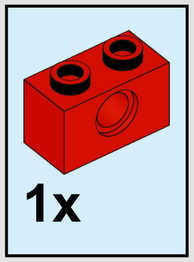

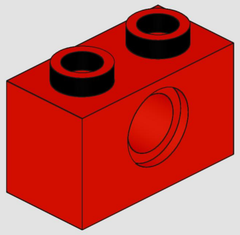

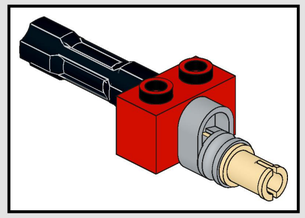

37

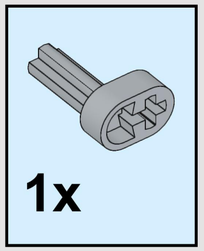

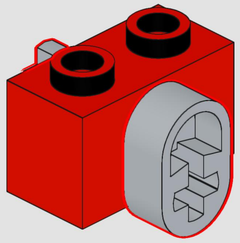

38

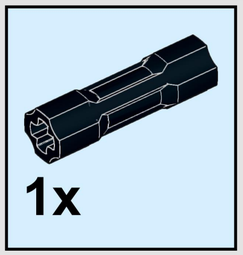

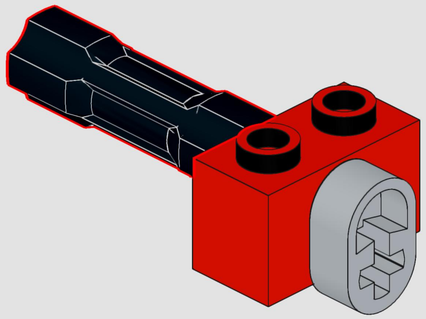

39

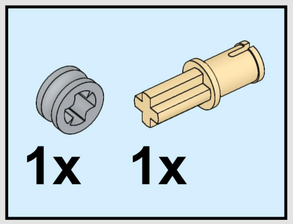

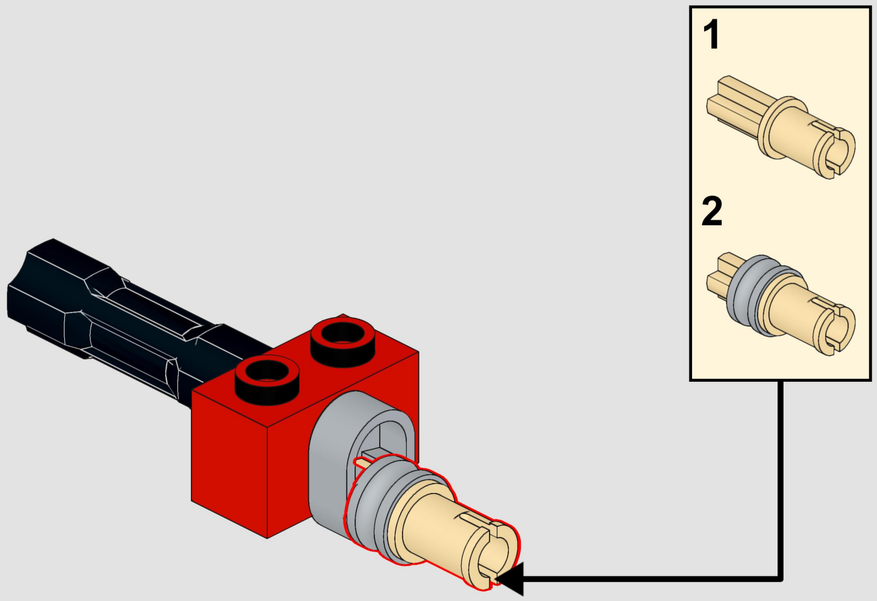

40

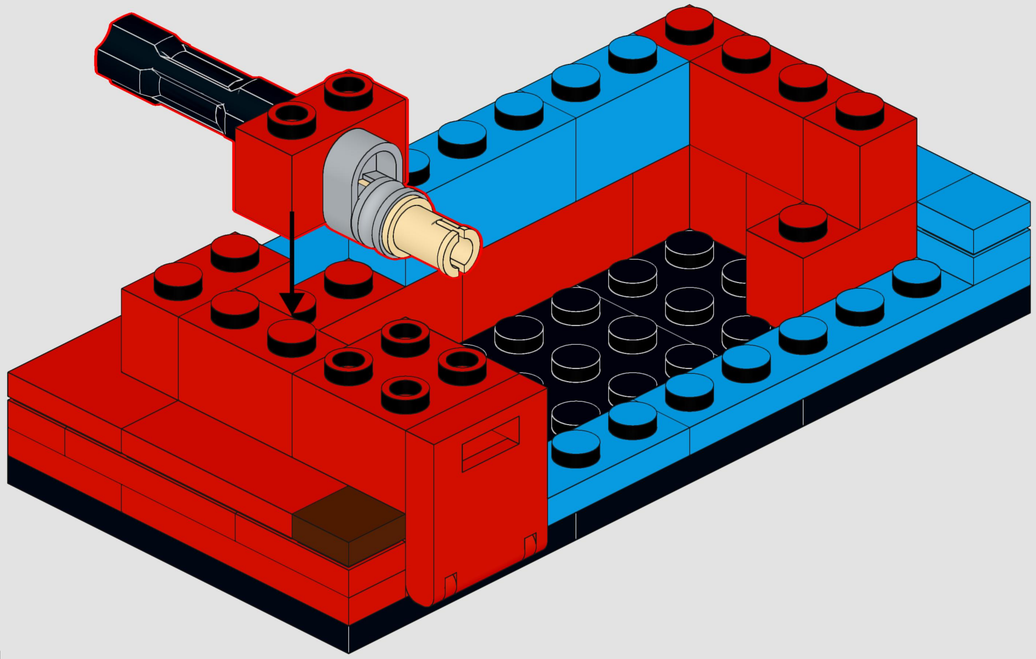

41

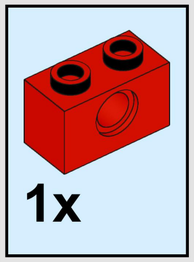

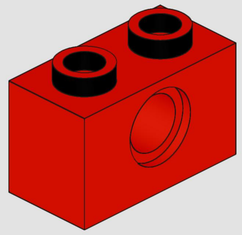

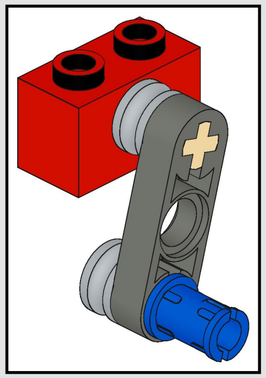

42

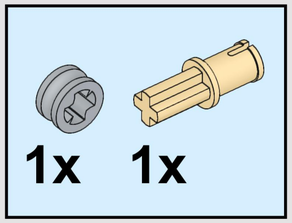

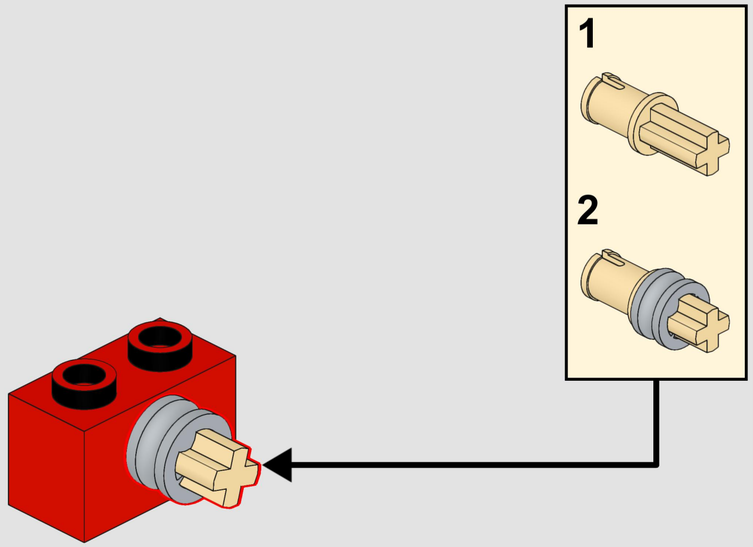

43

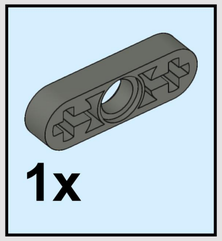

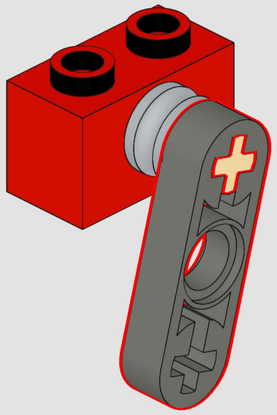

44

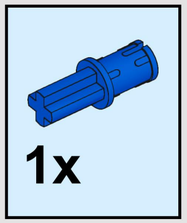

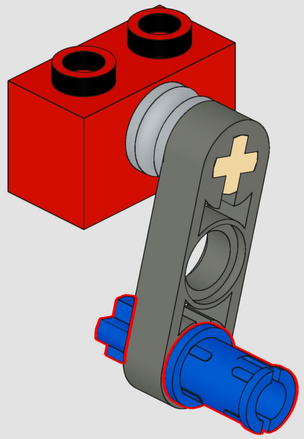

45

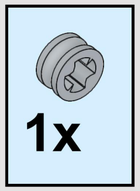

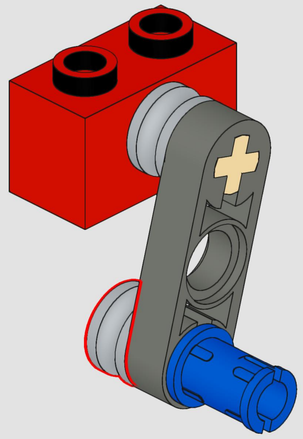

46

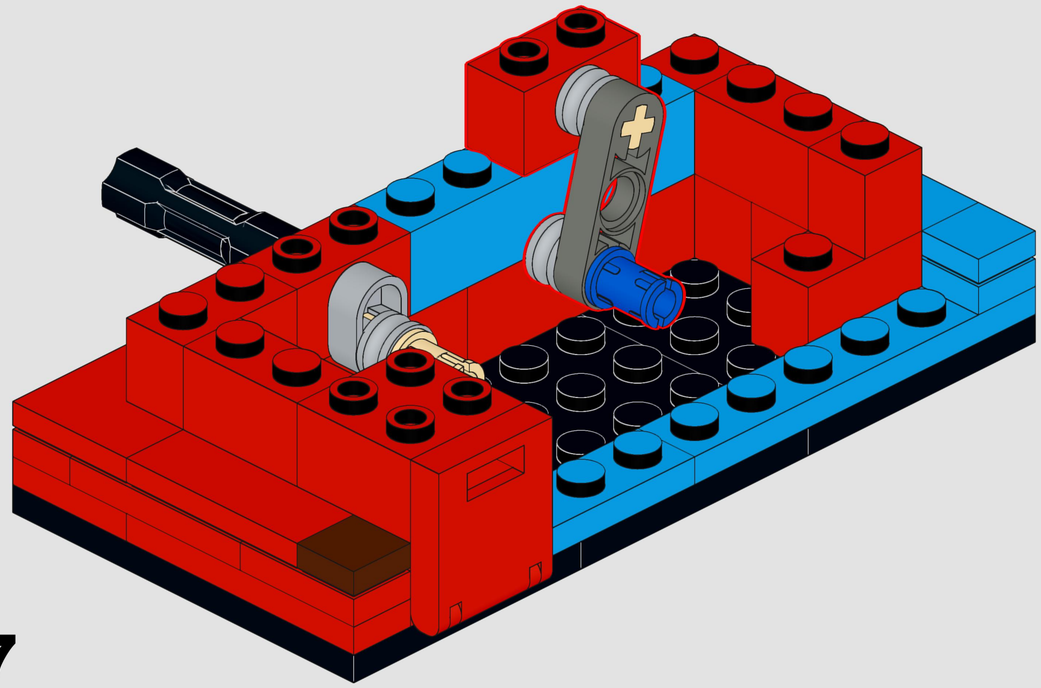

47

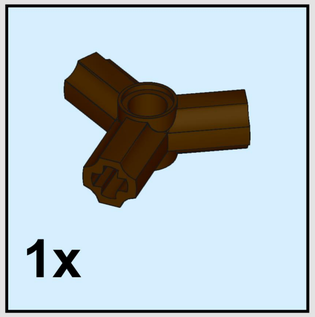

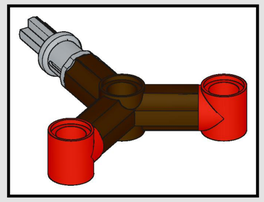

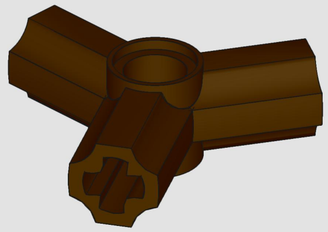

48

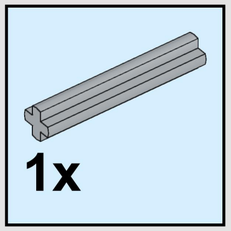

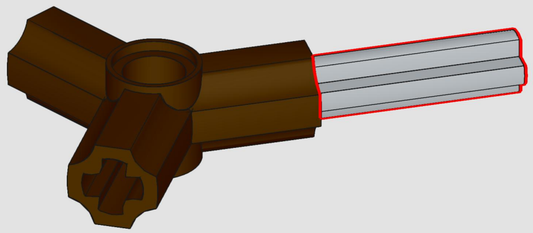

49

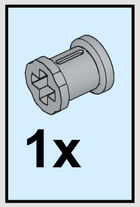

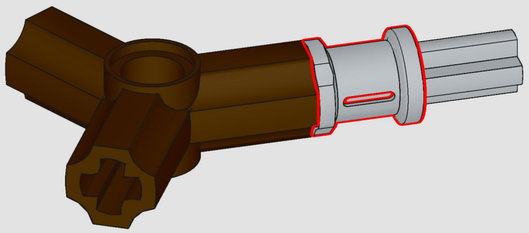

50

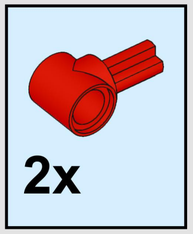

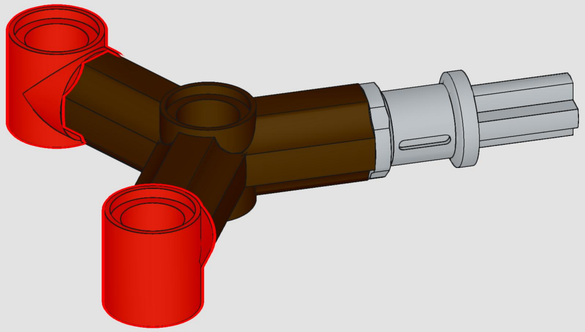

51

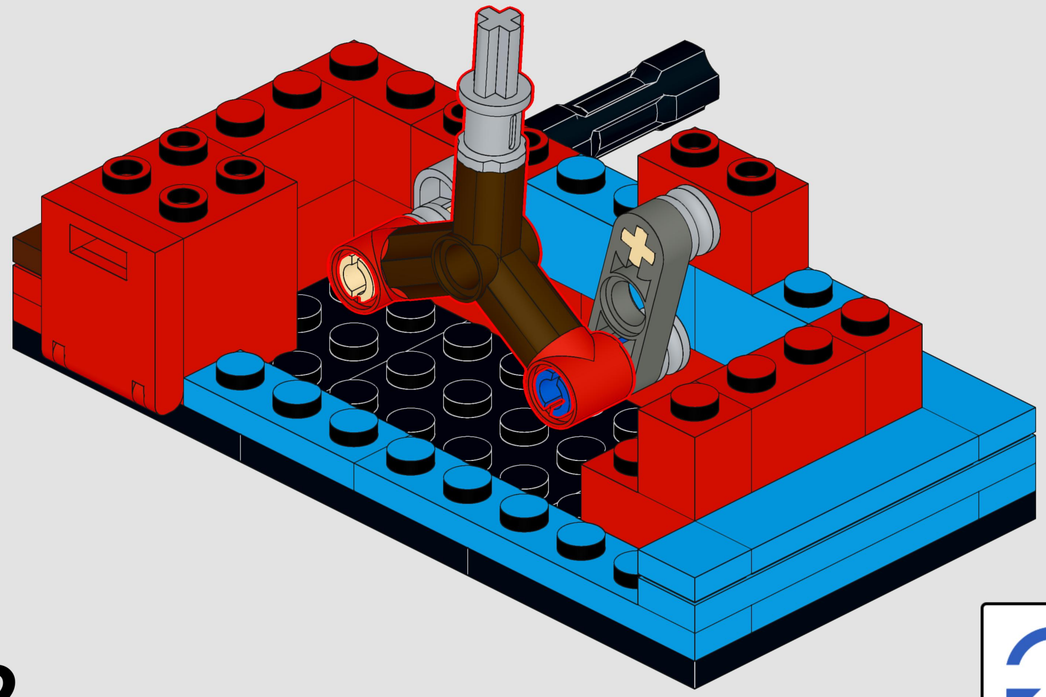

52

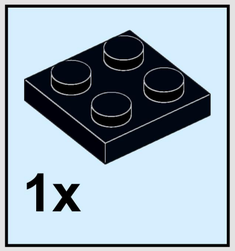

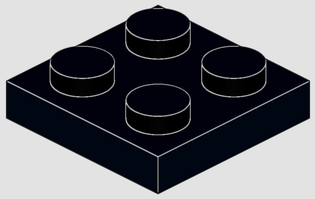

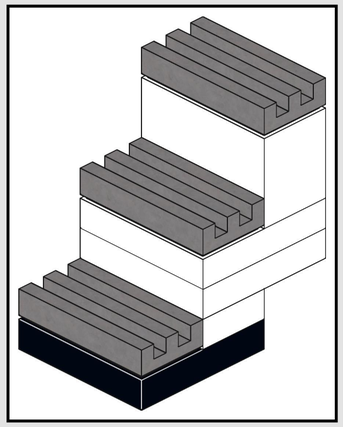

53

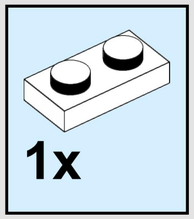

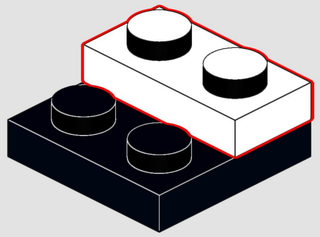

54

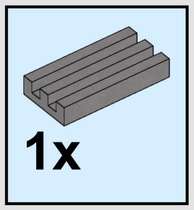

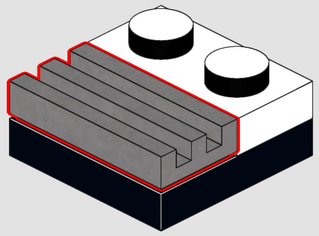

55

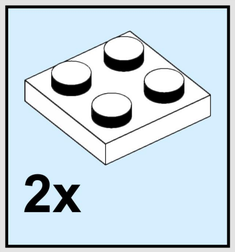

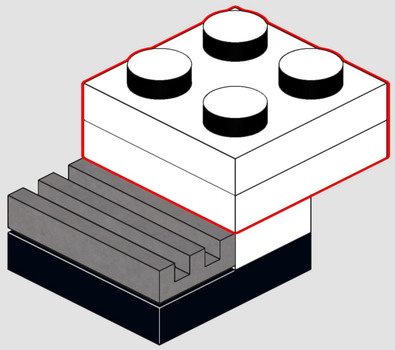

56

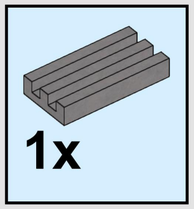

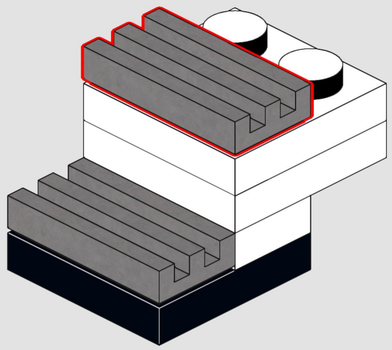

57

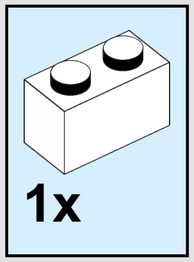

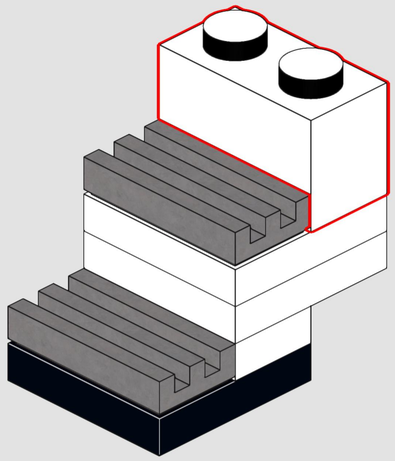

58

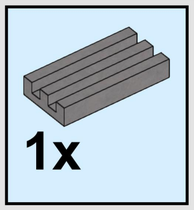

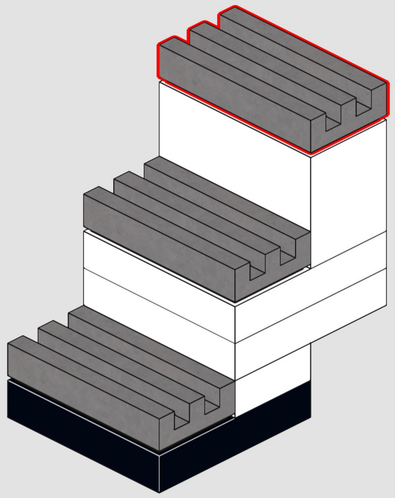

59

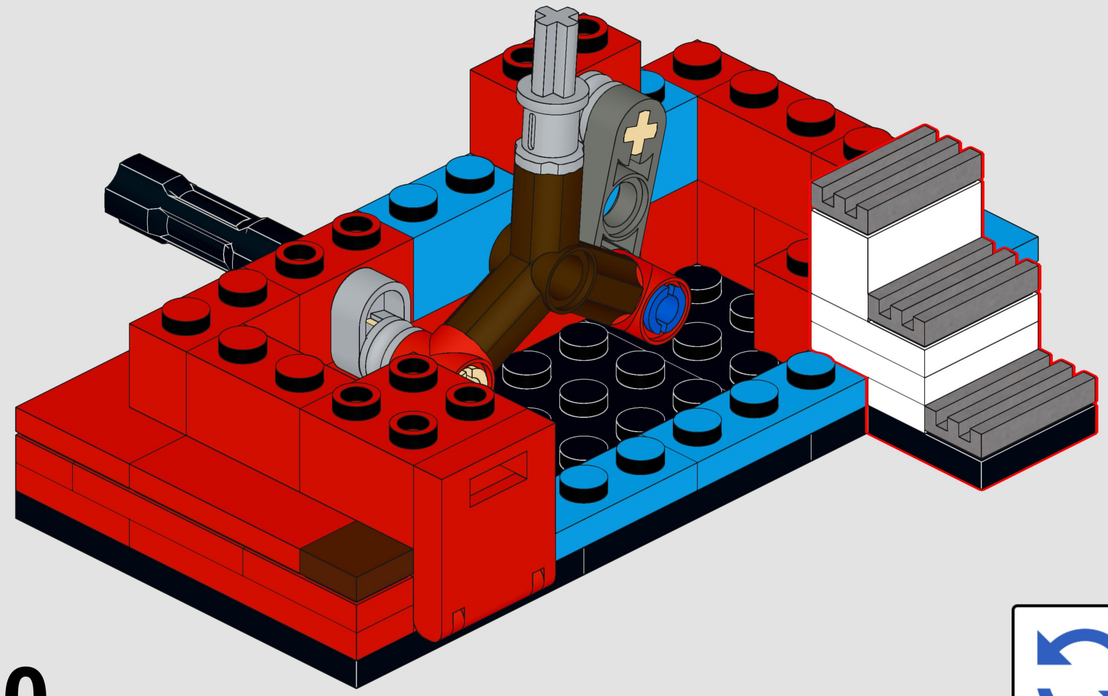

60

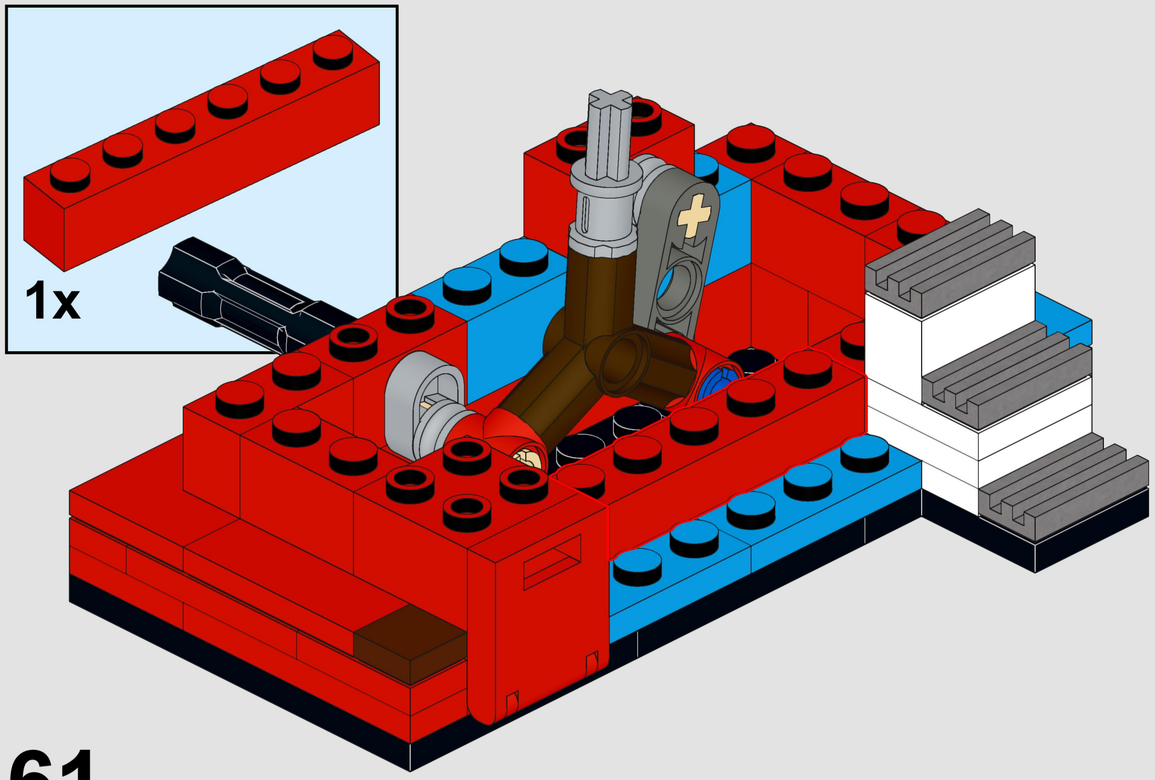

61

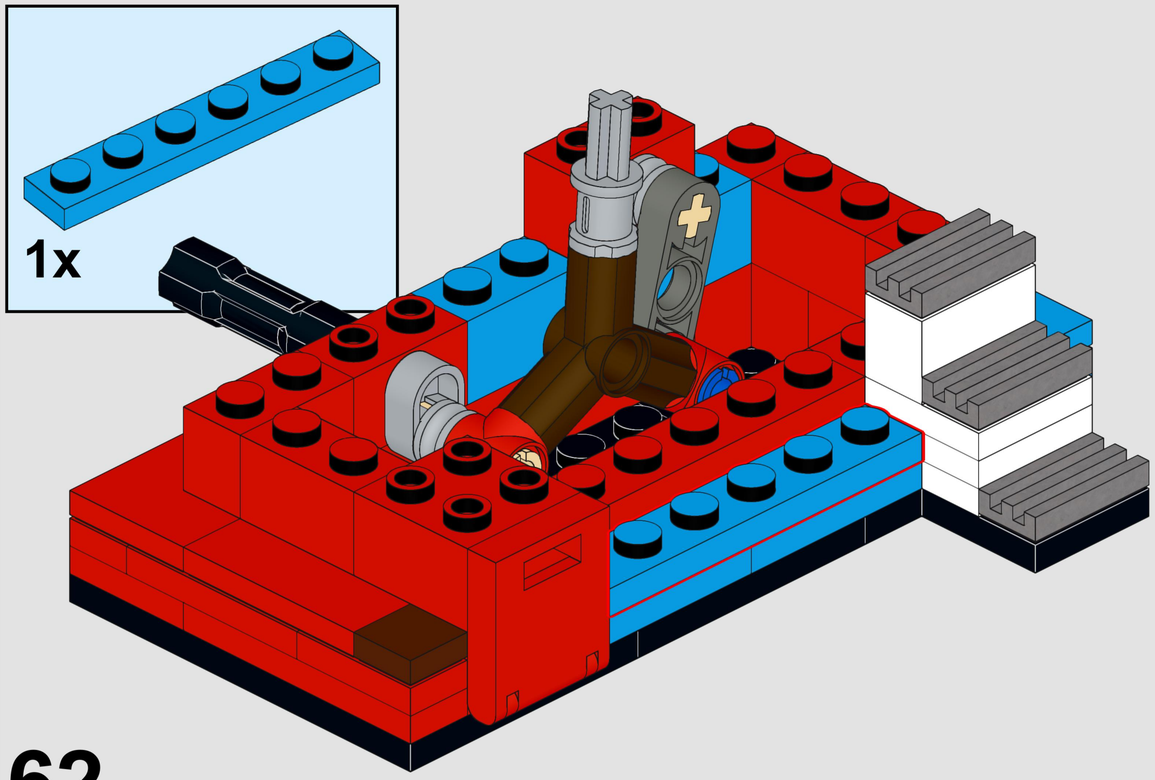

62

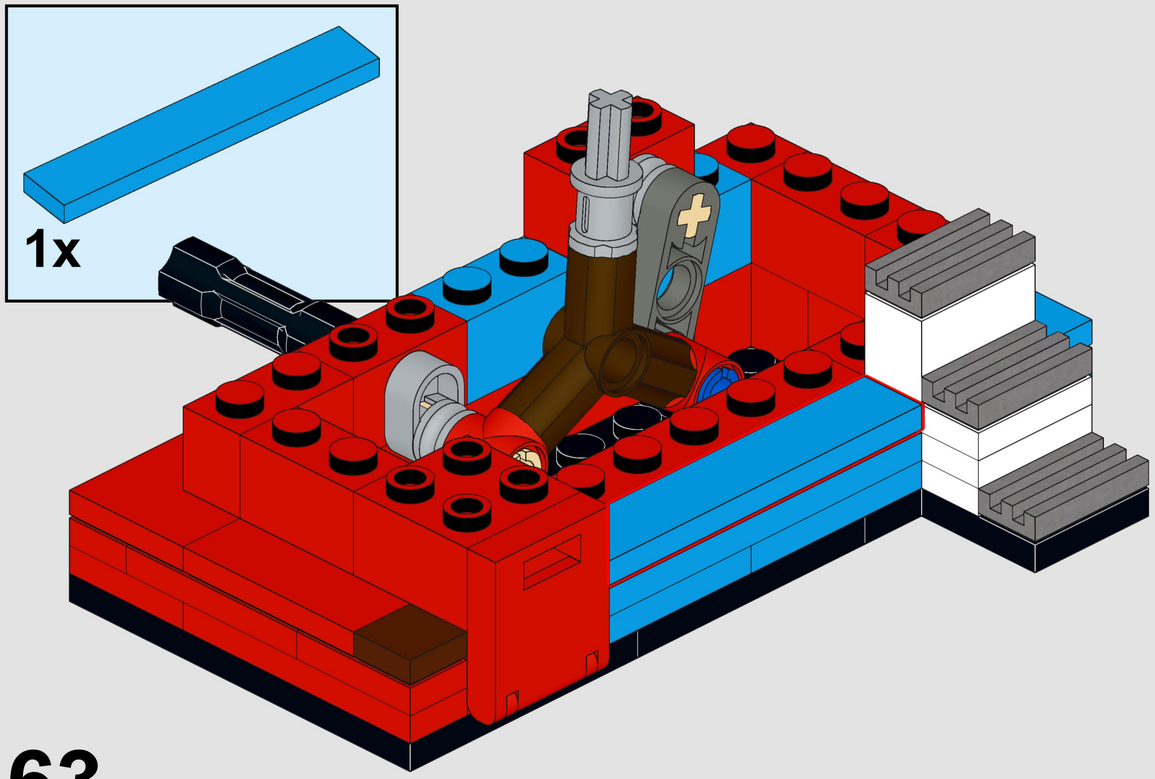

63

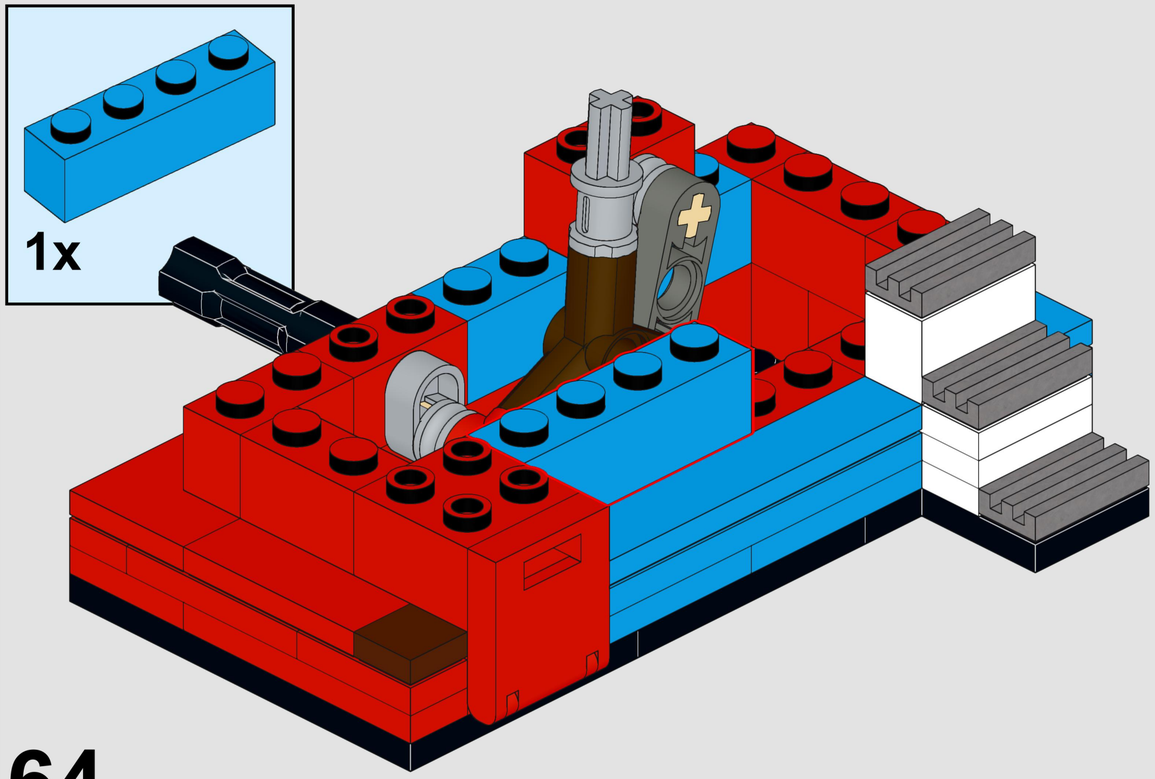

64

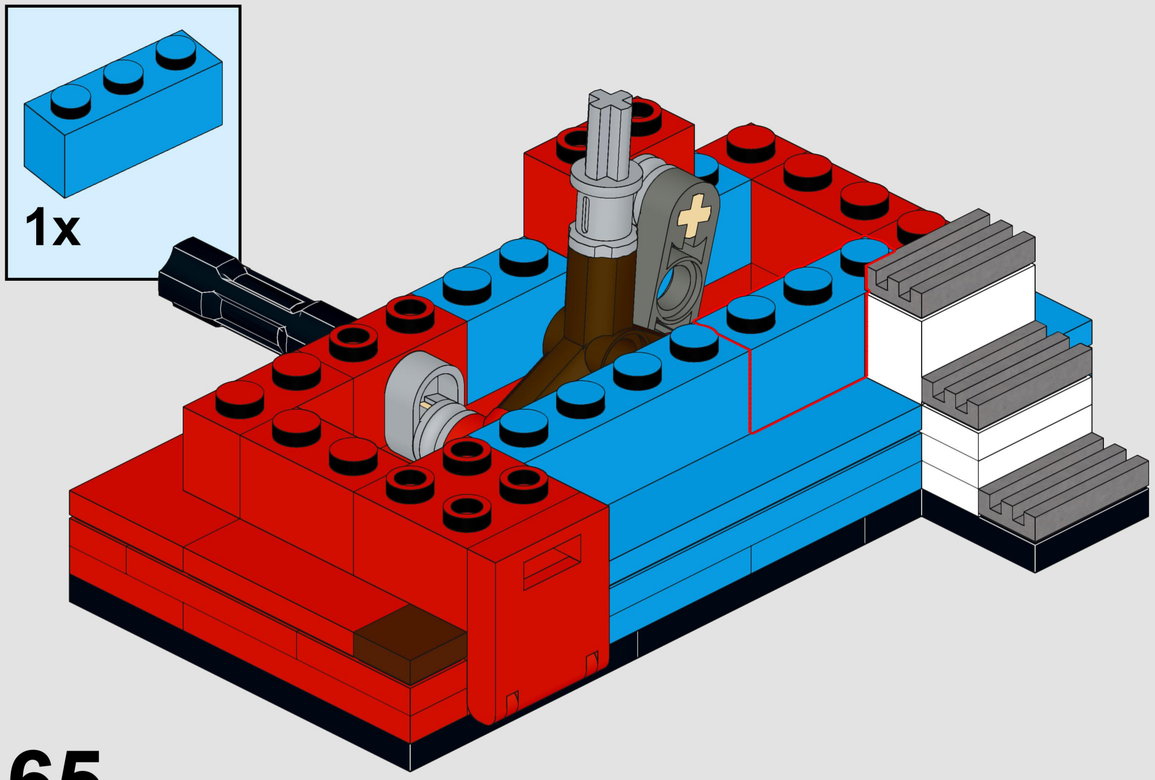

65

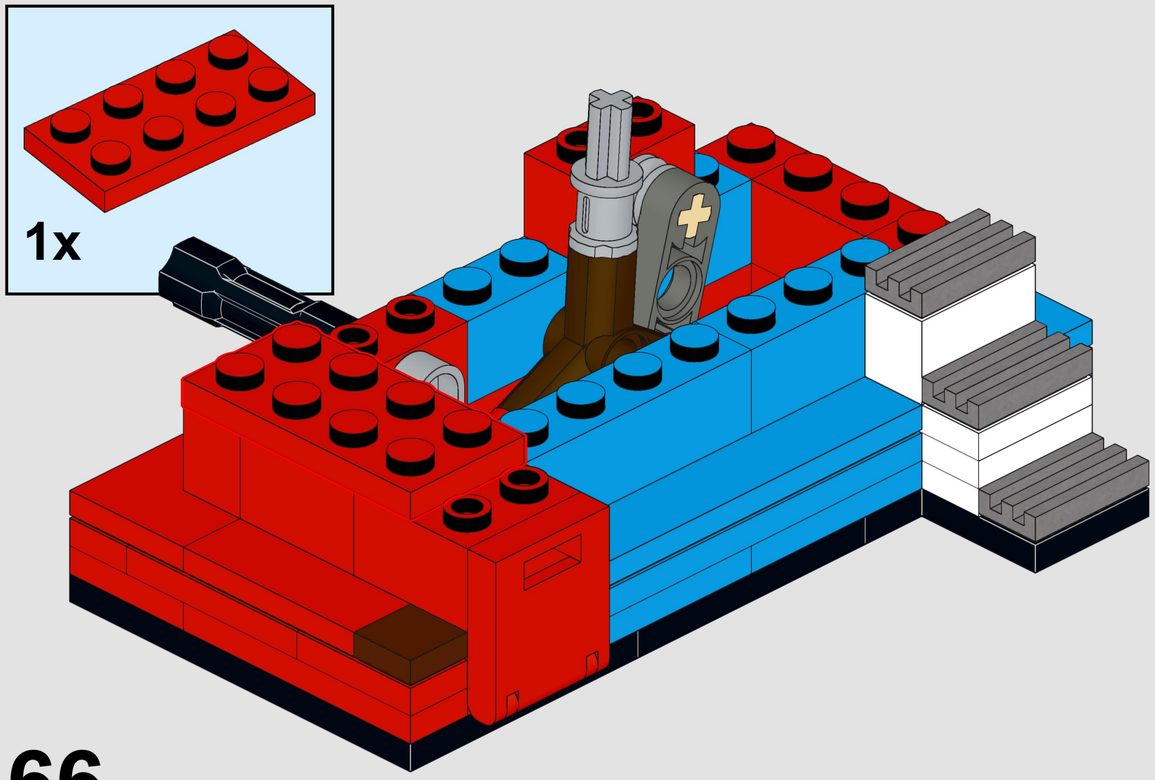

66

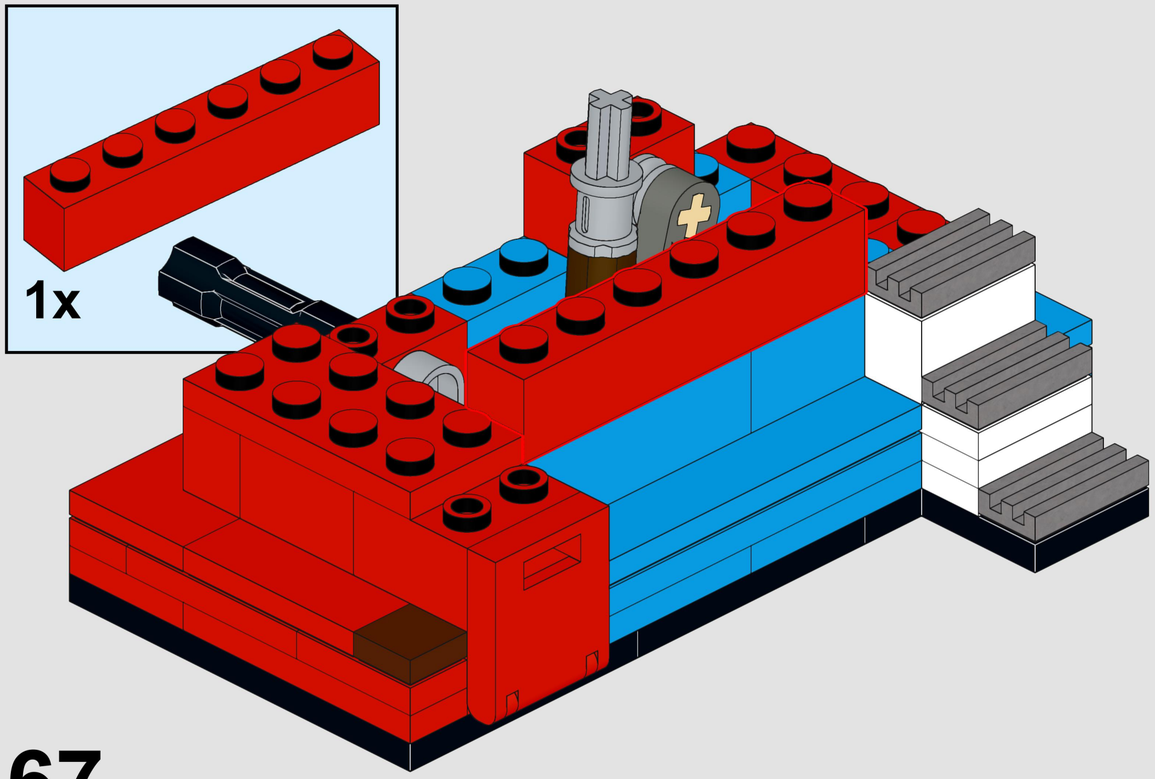

67

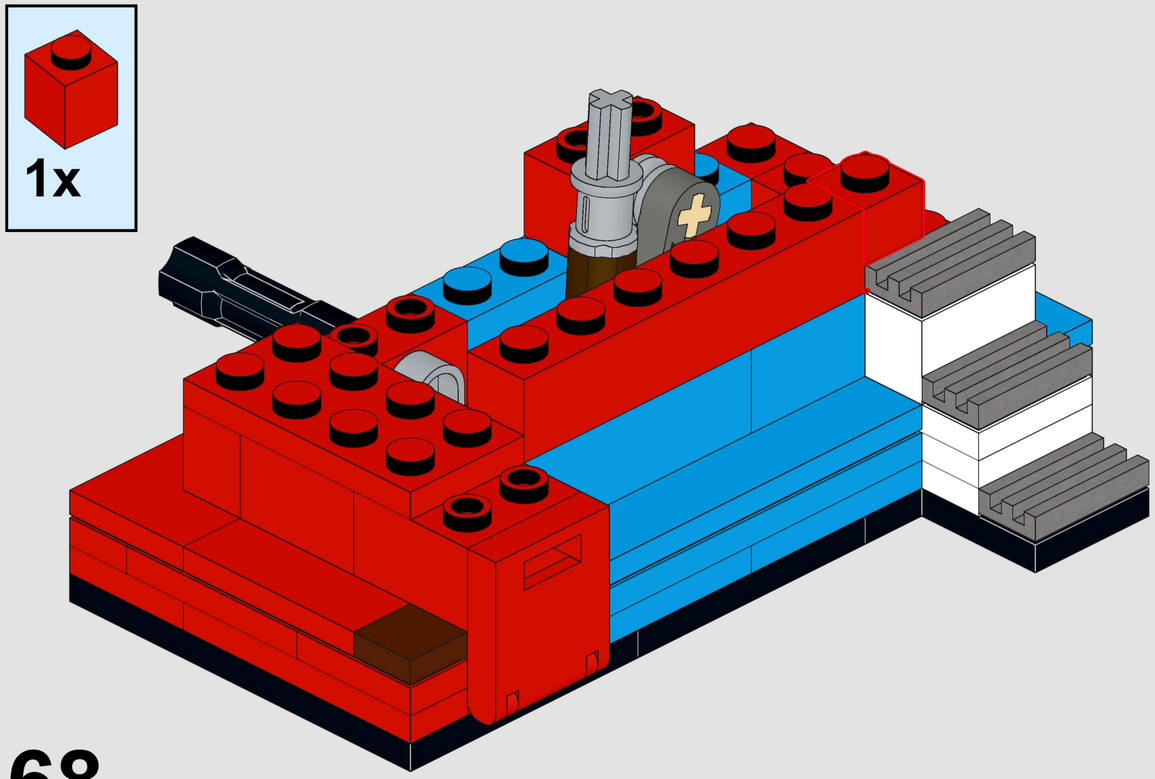

68

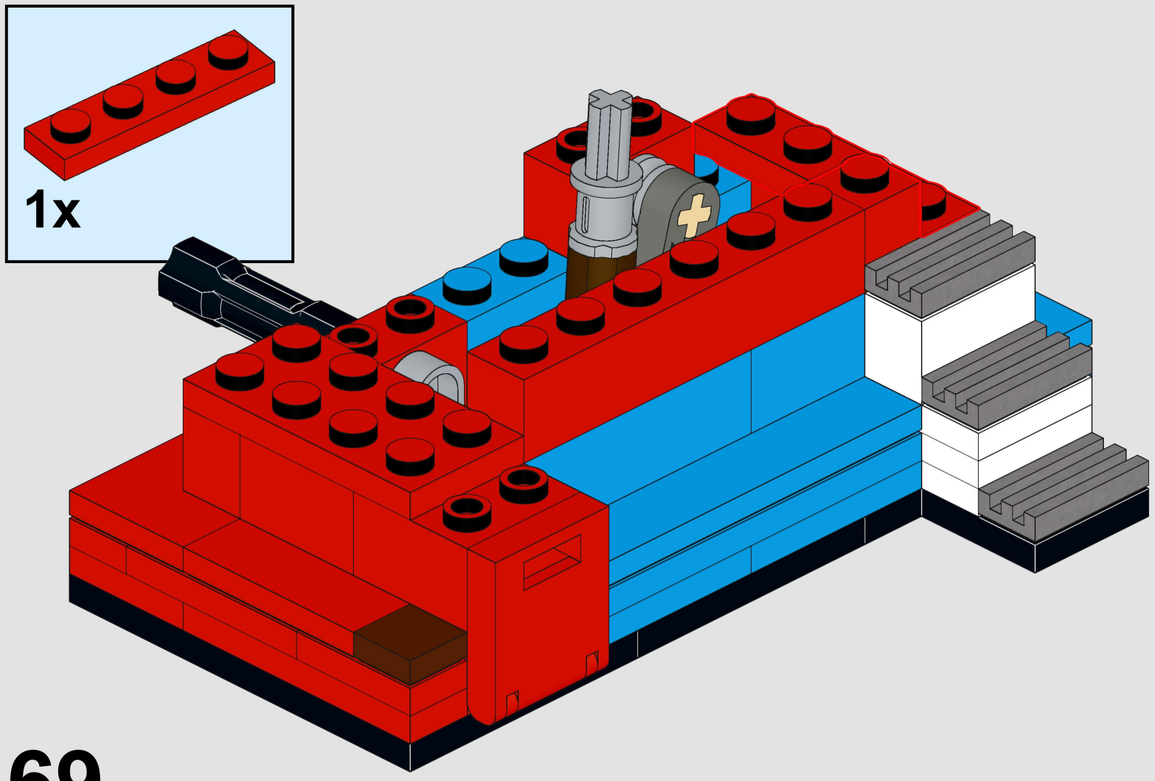

69

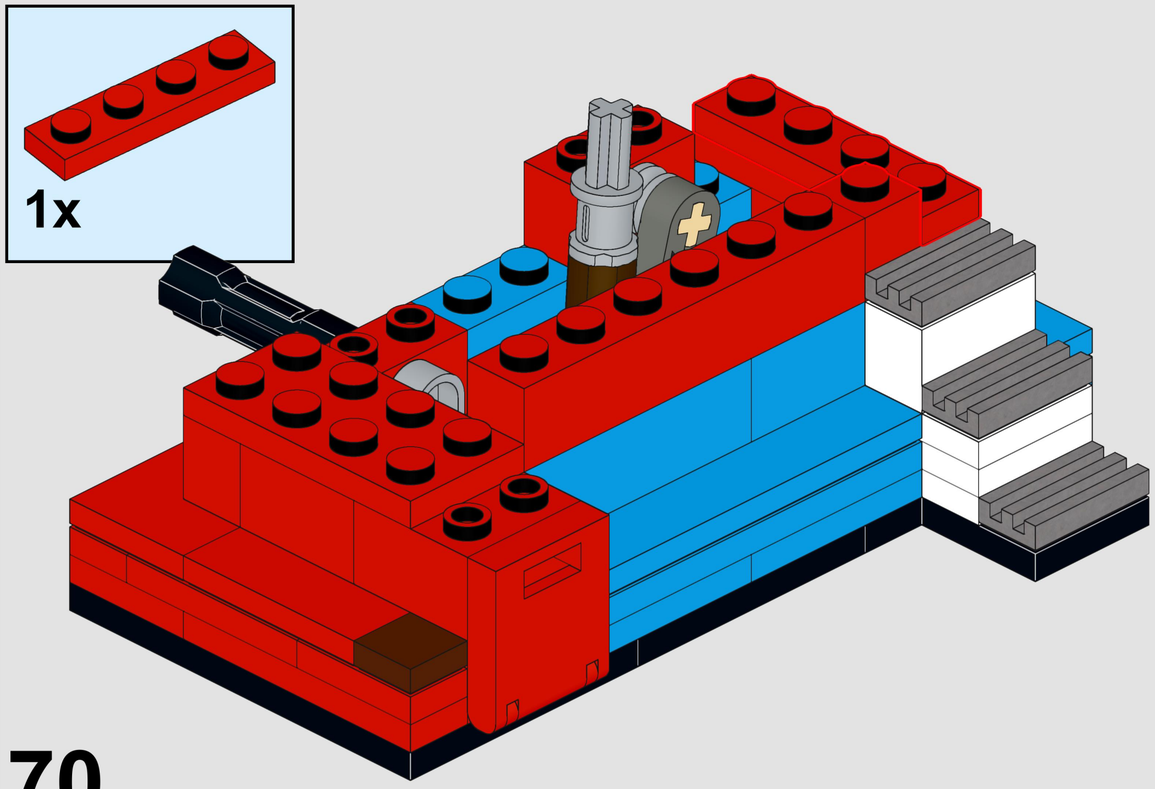

70

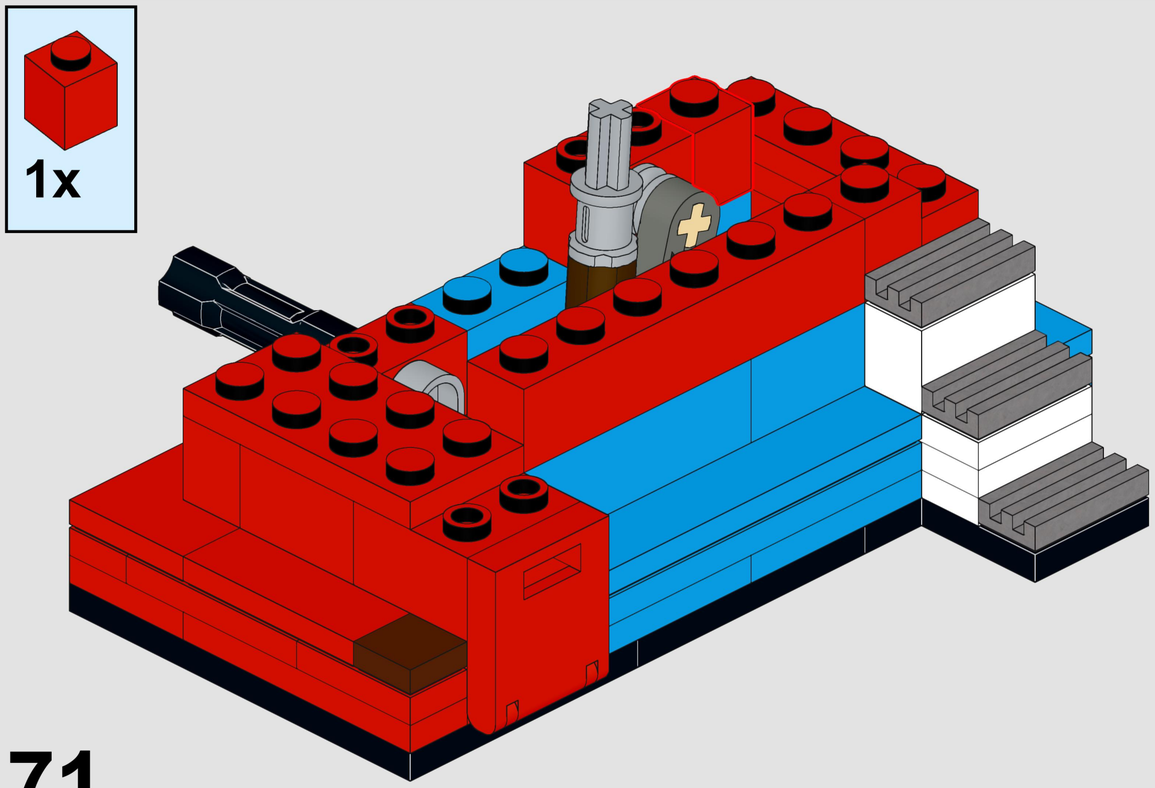

71

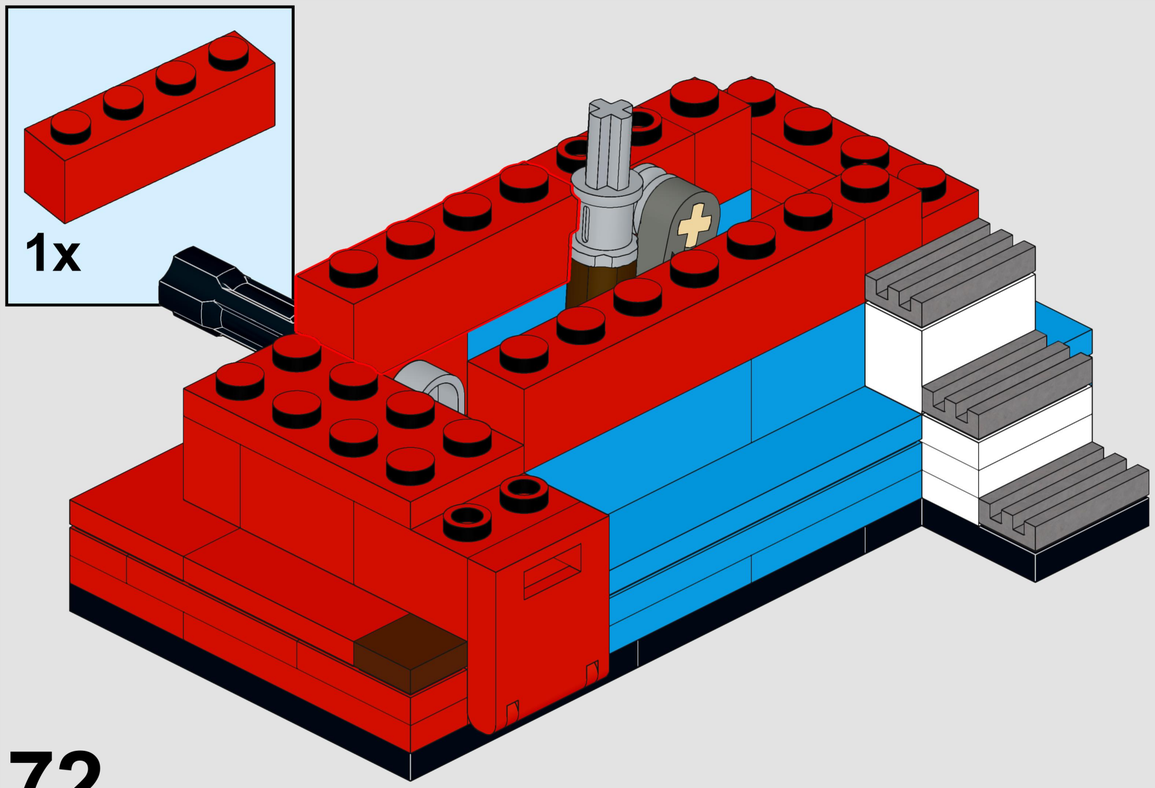

72

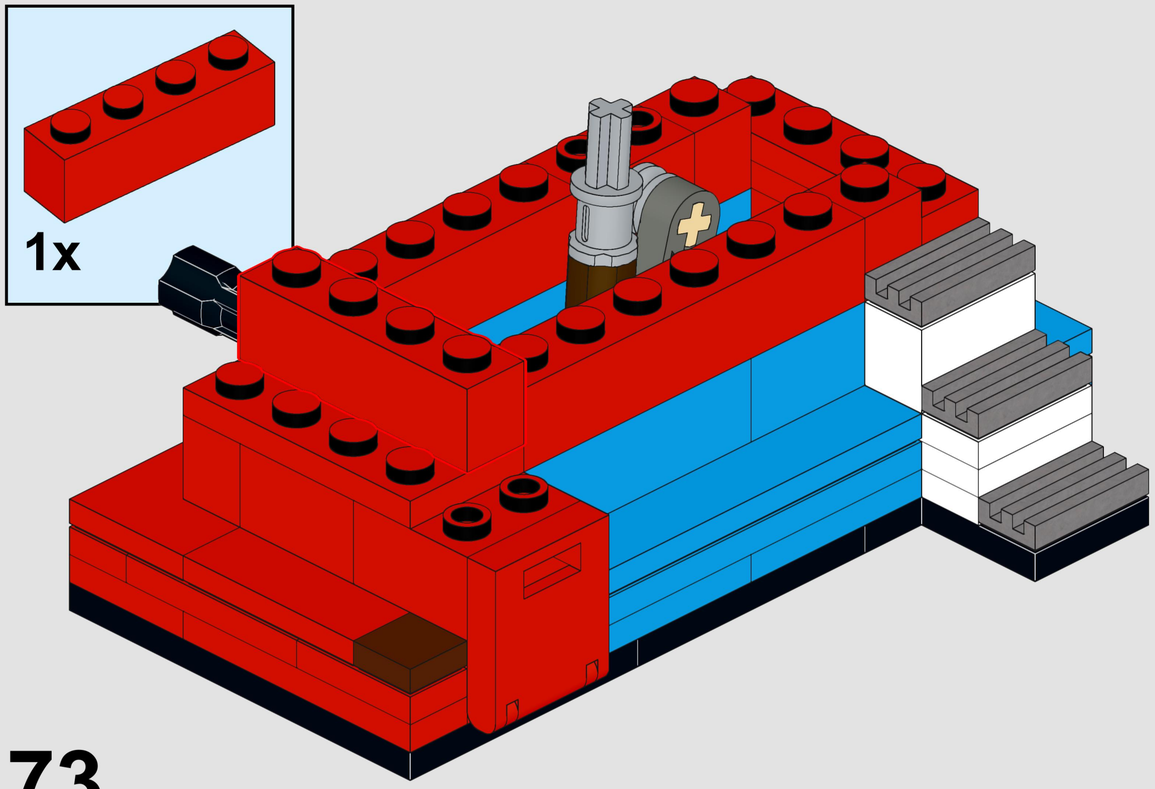

73

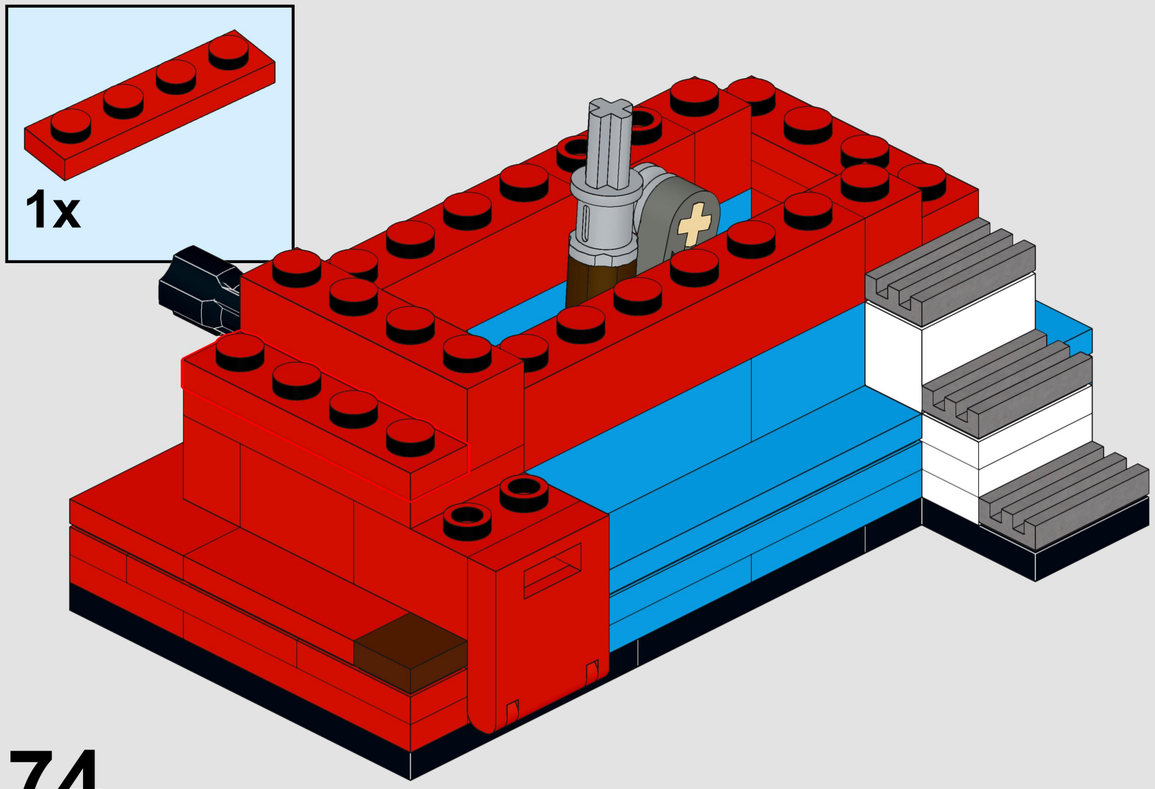

74

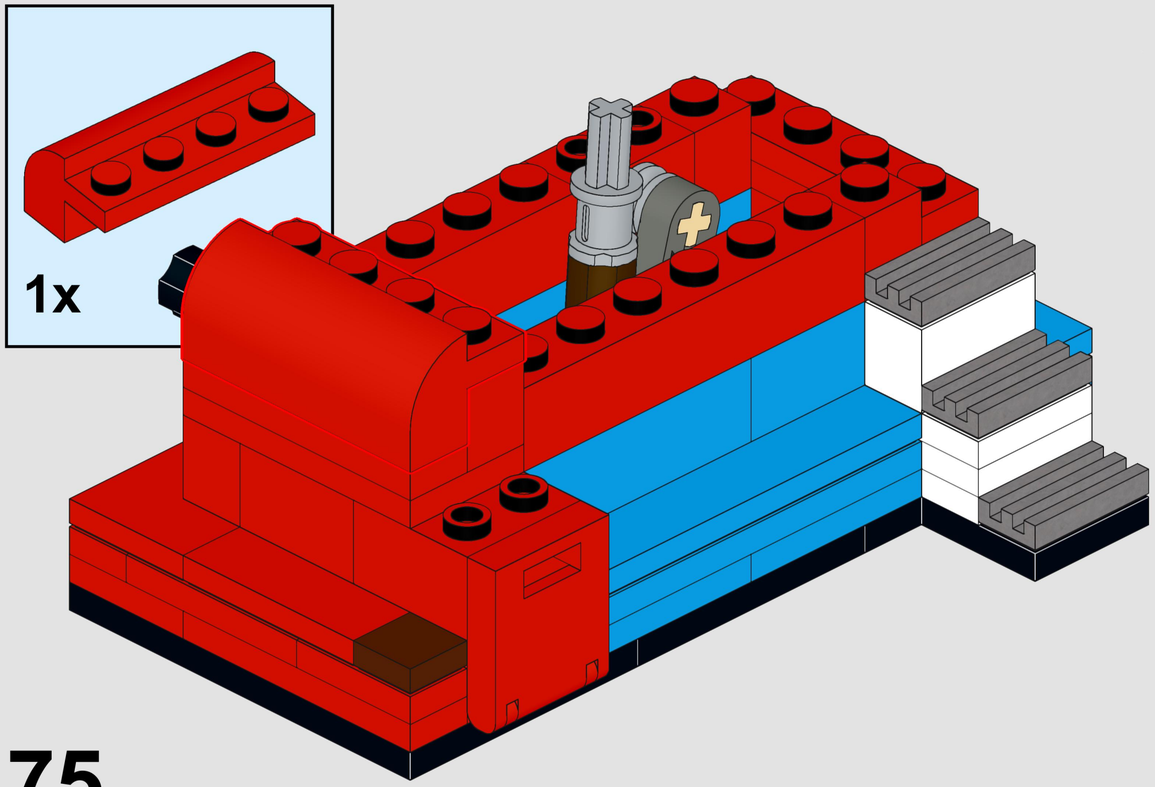

75

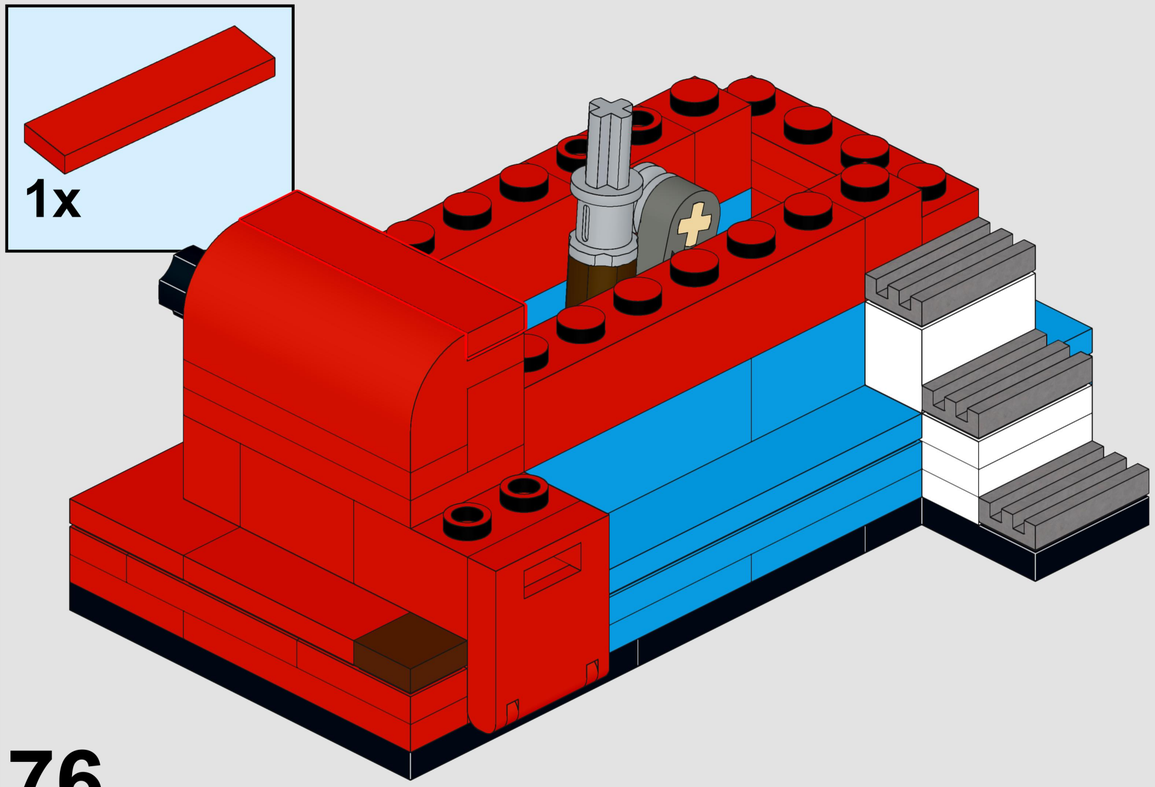

76

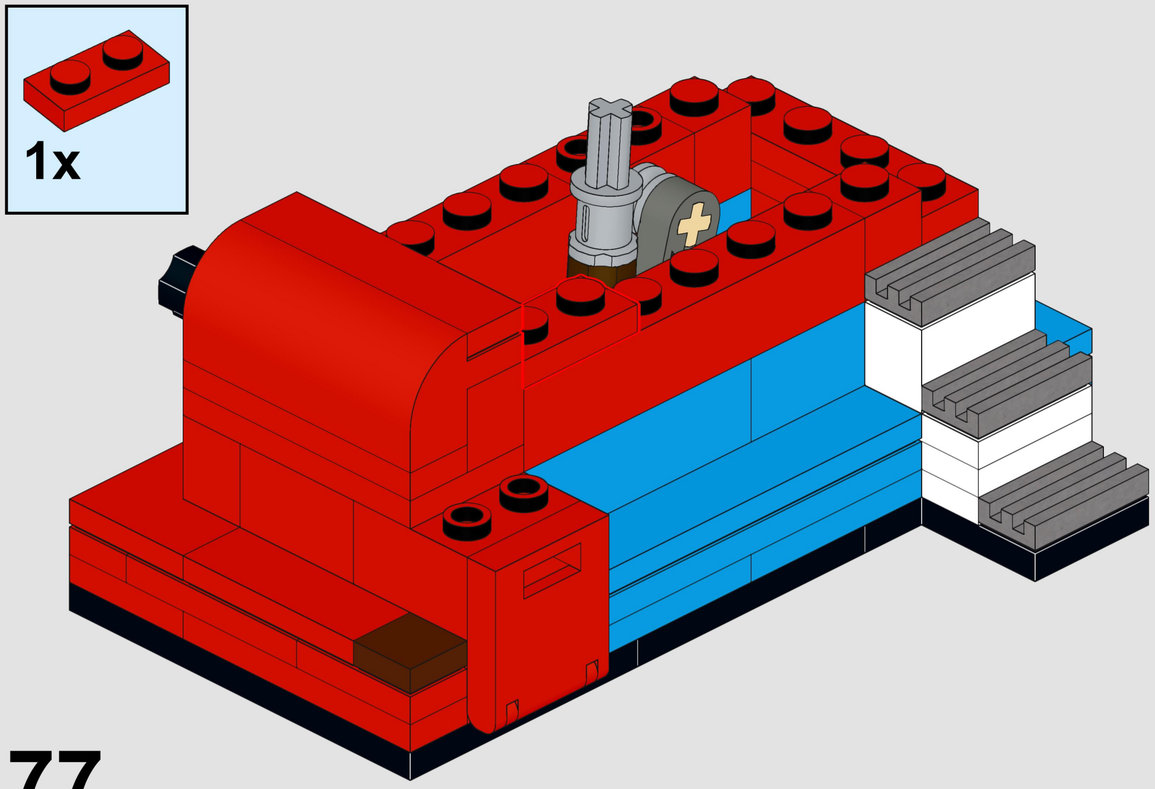

77

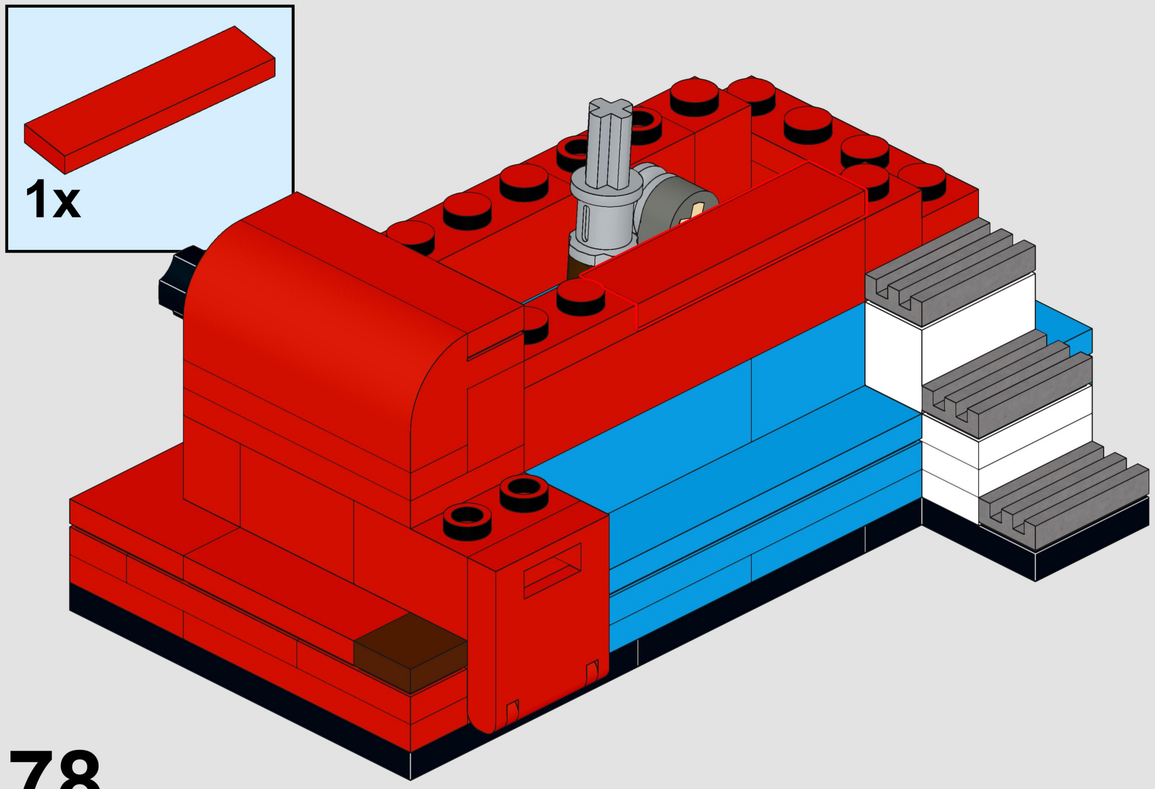

78

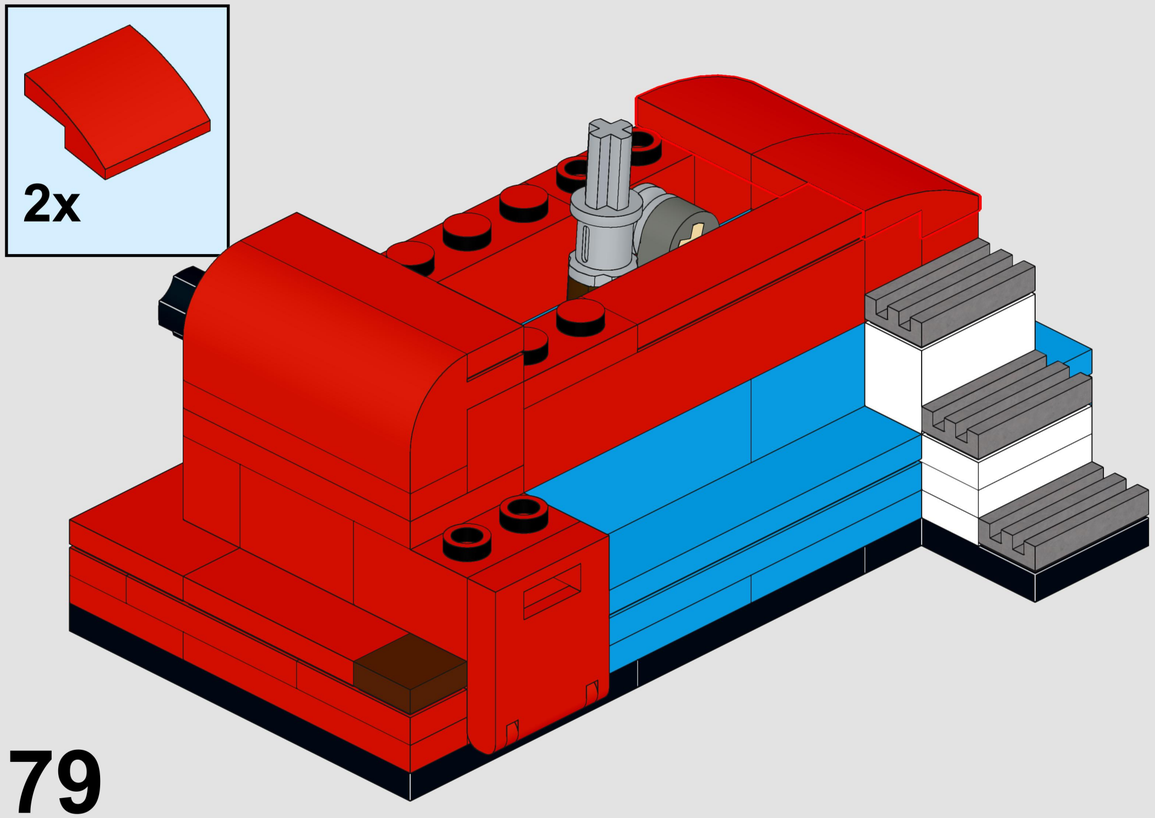

79

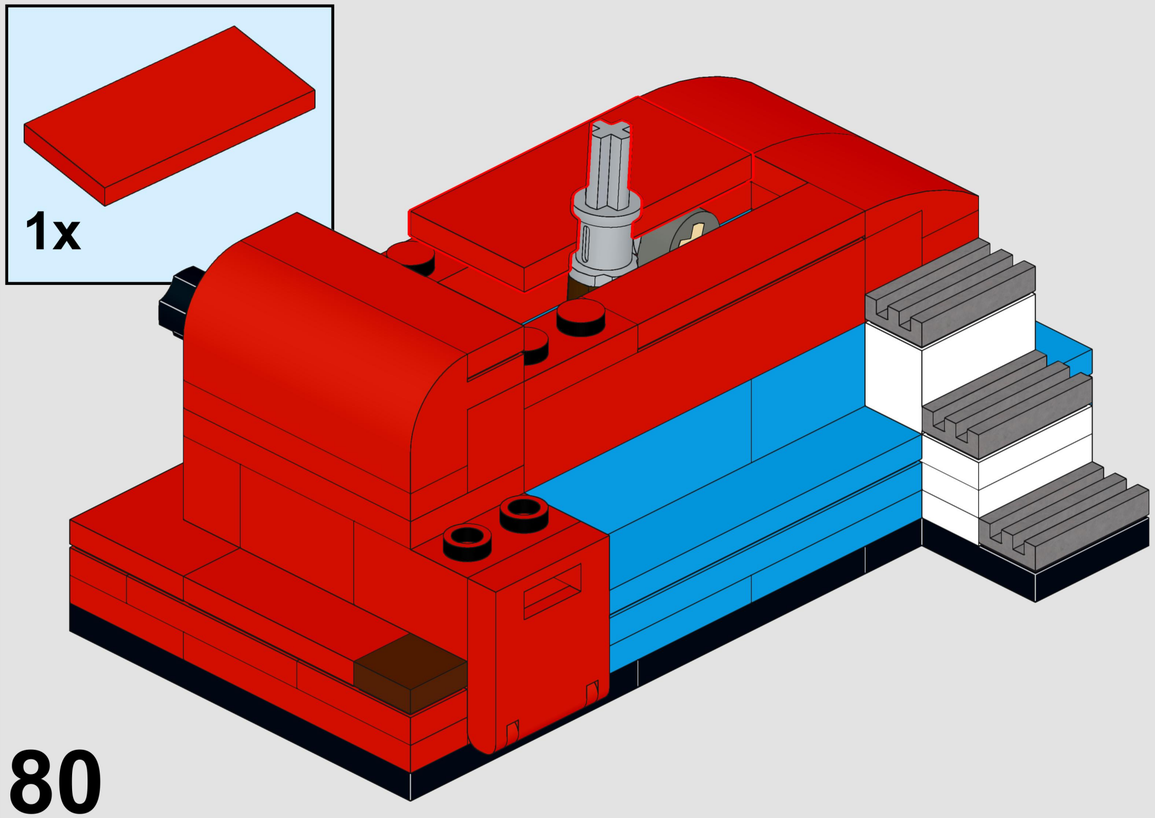

80

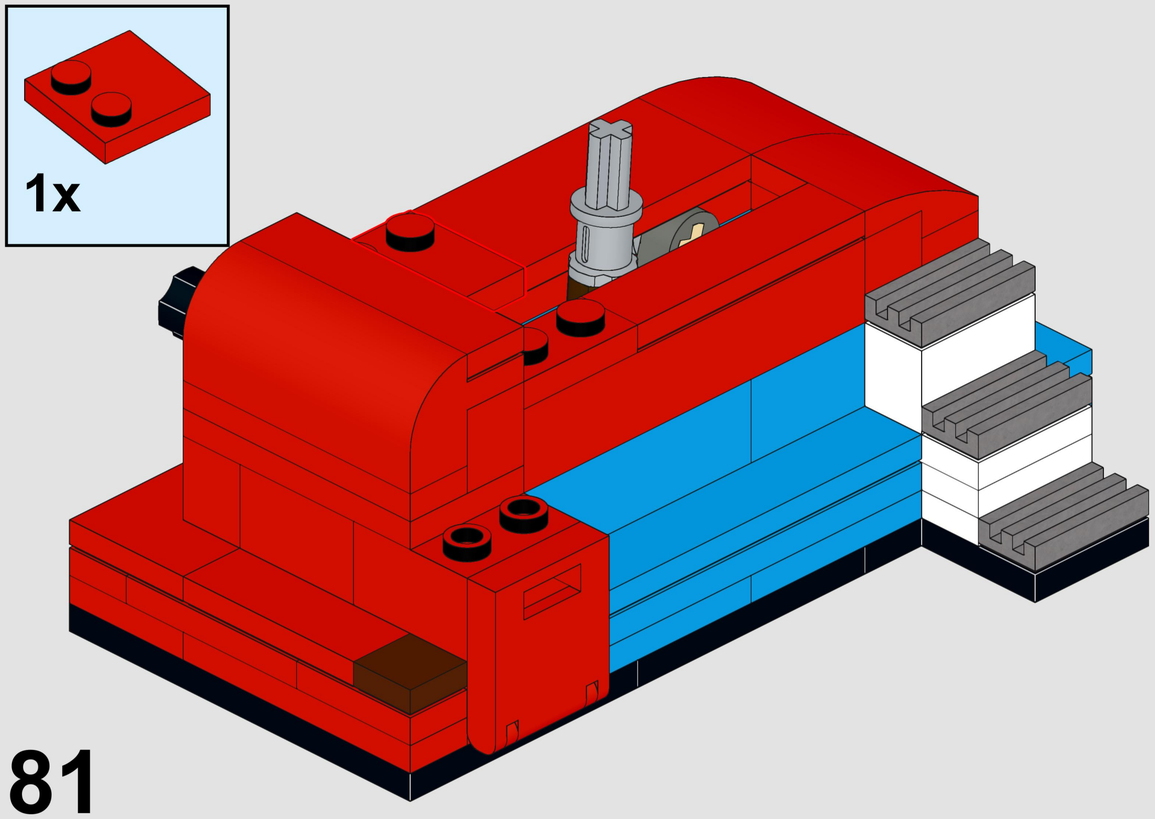

81

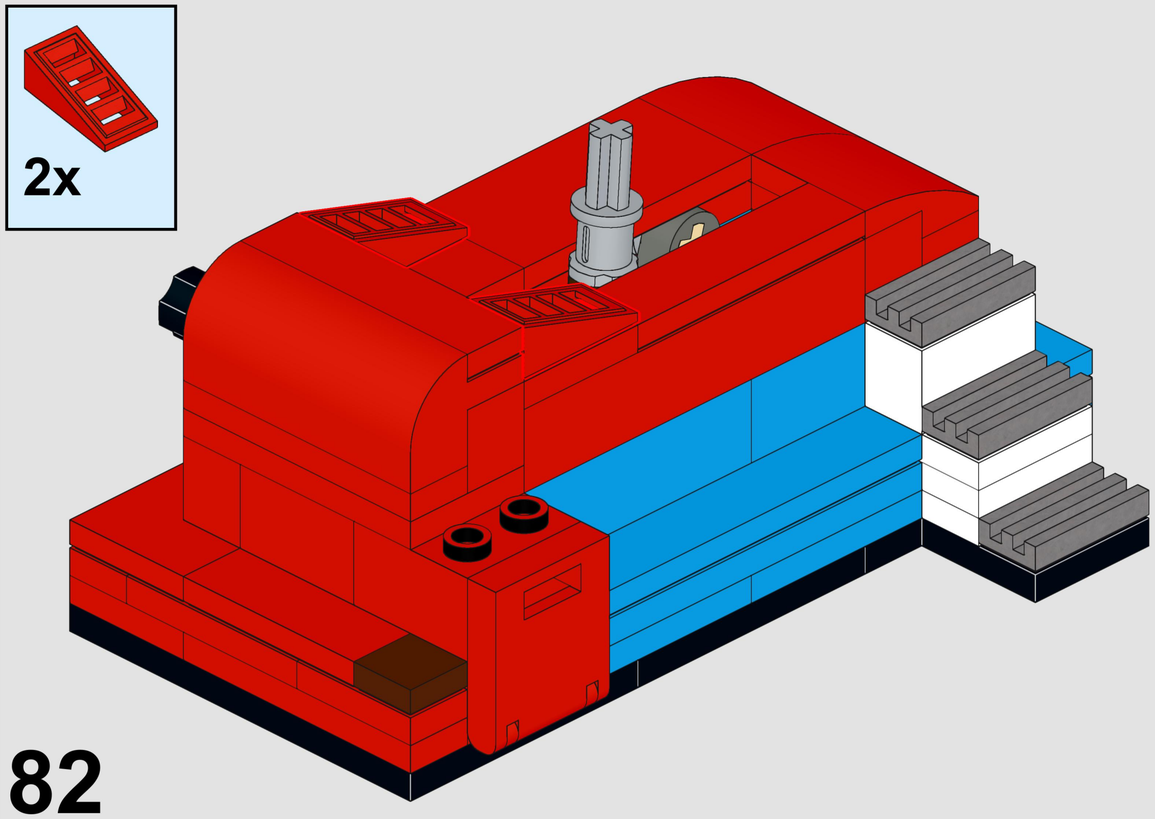

82

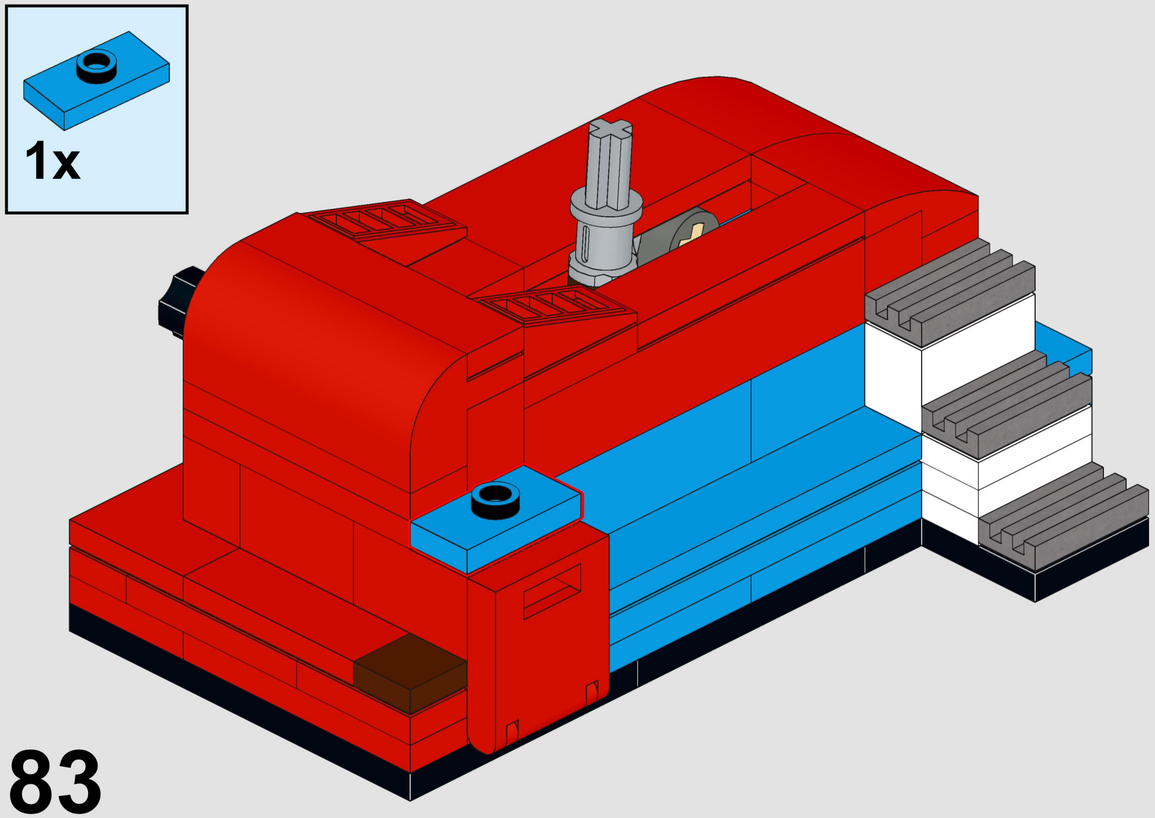

83

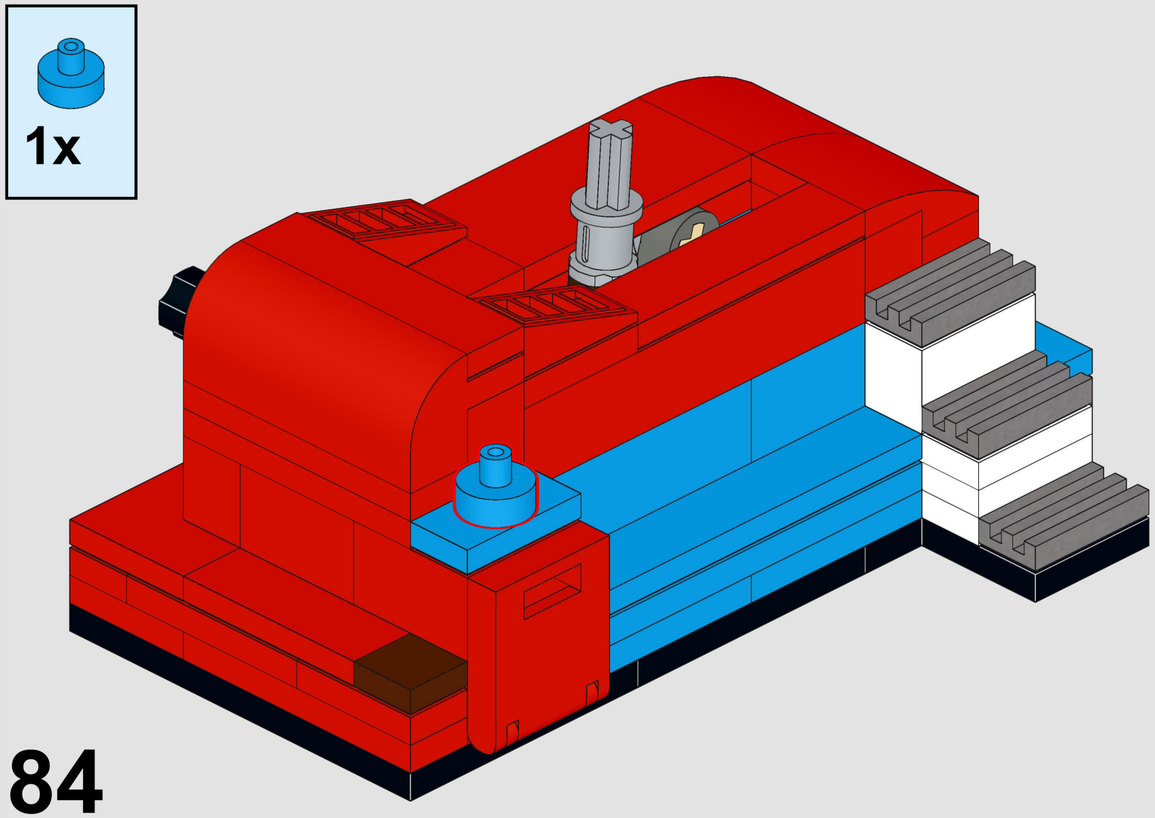

84

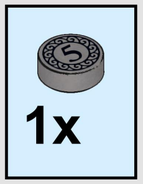

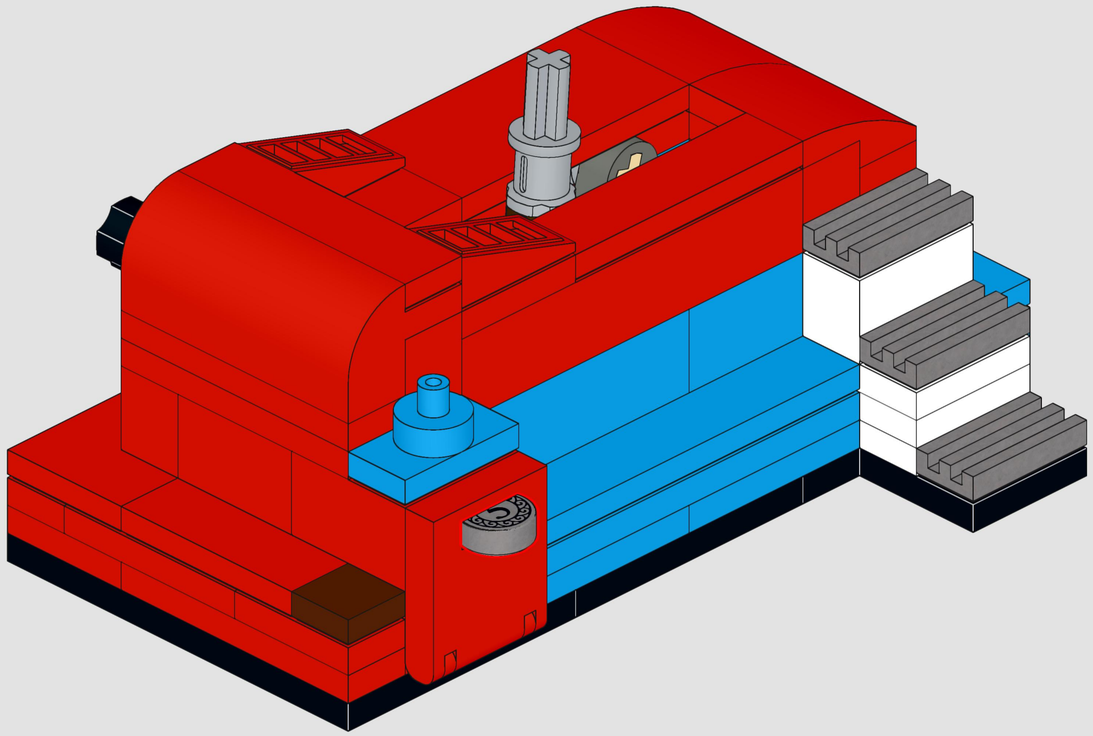

85

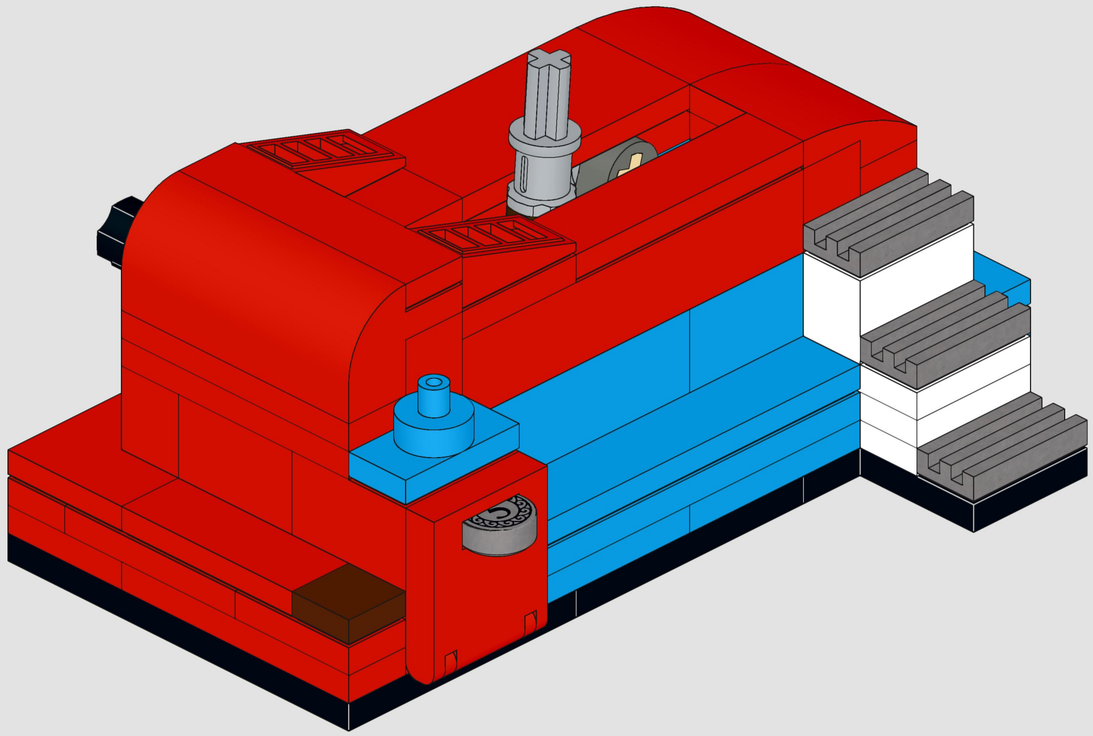

86

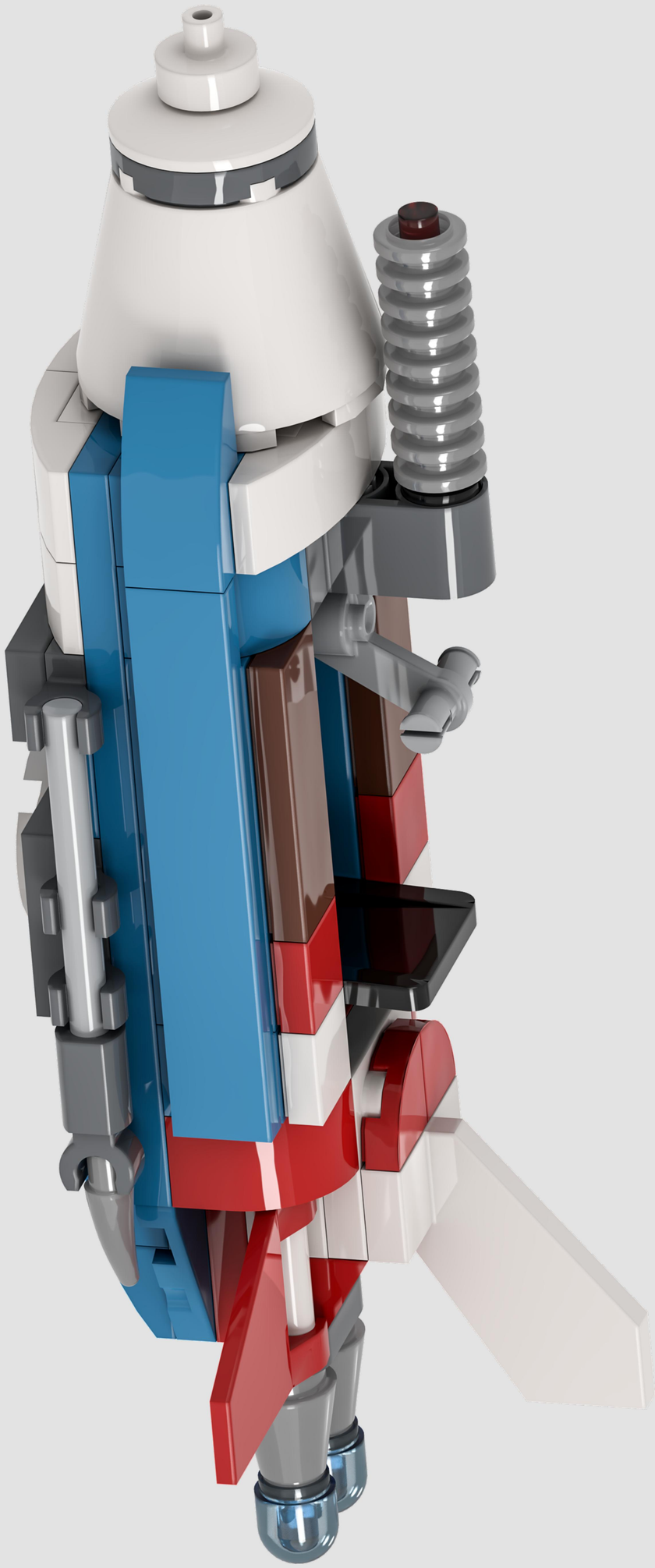

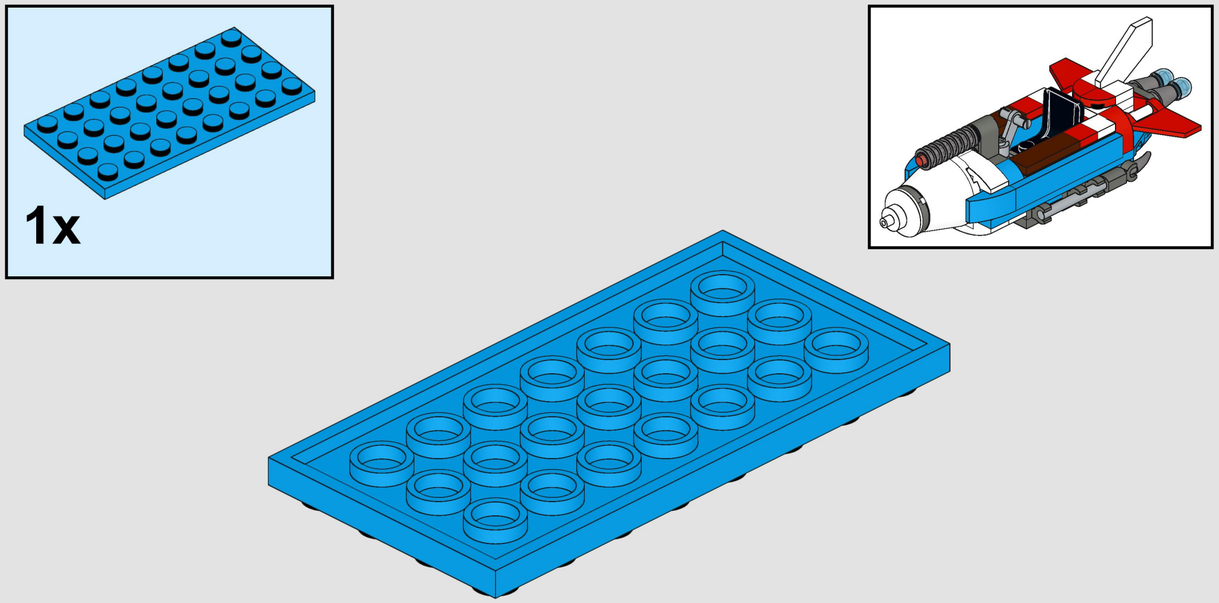

87

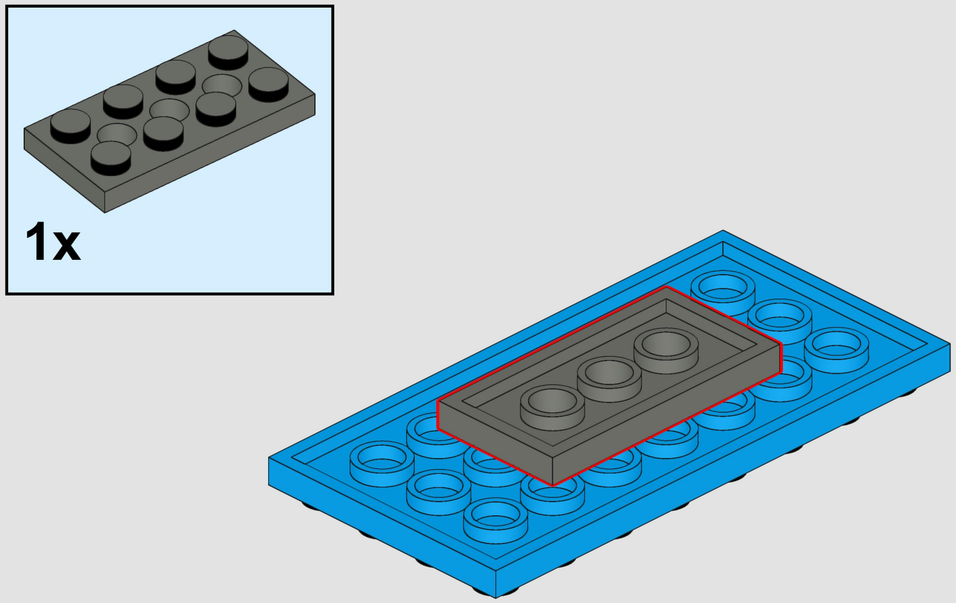

88

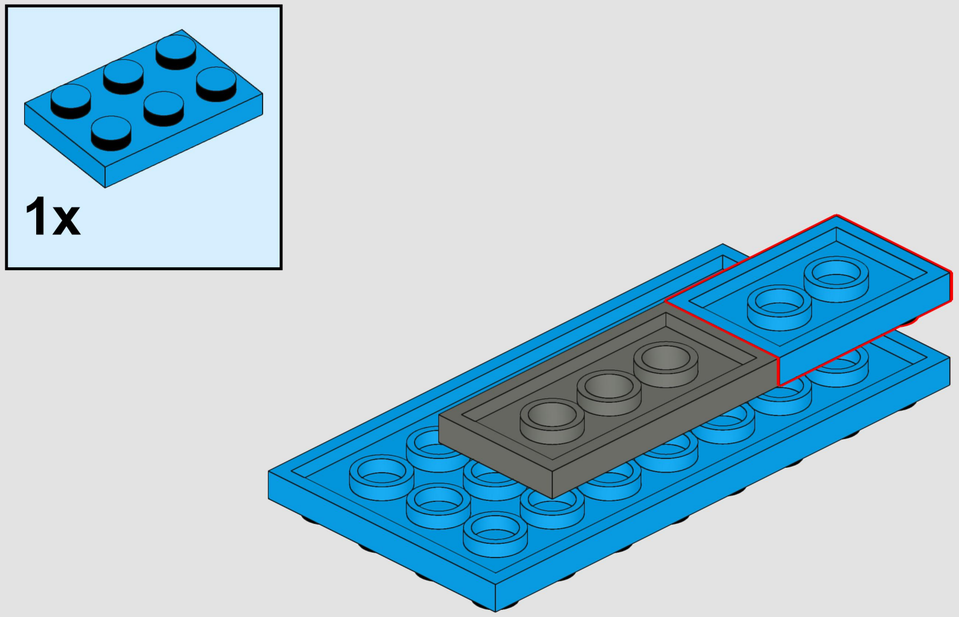

89

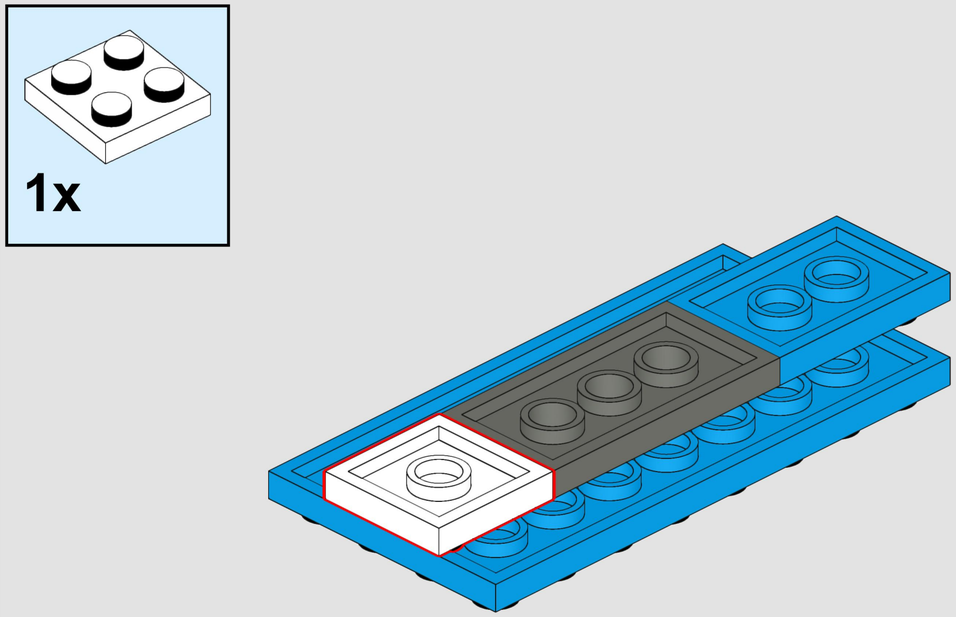

90

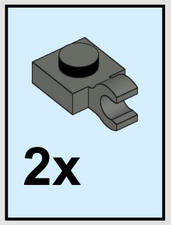

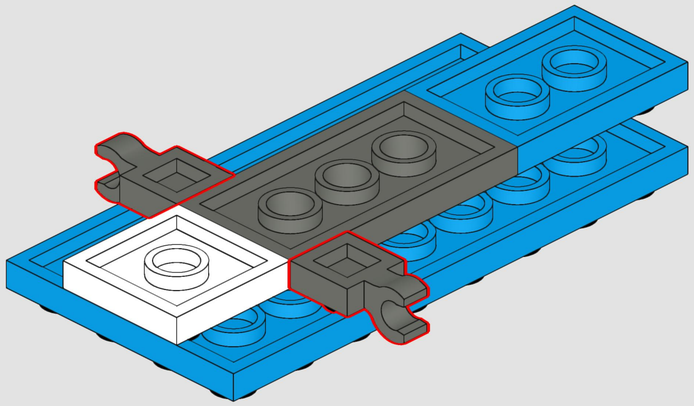

91

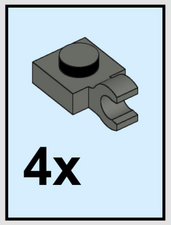

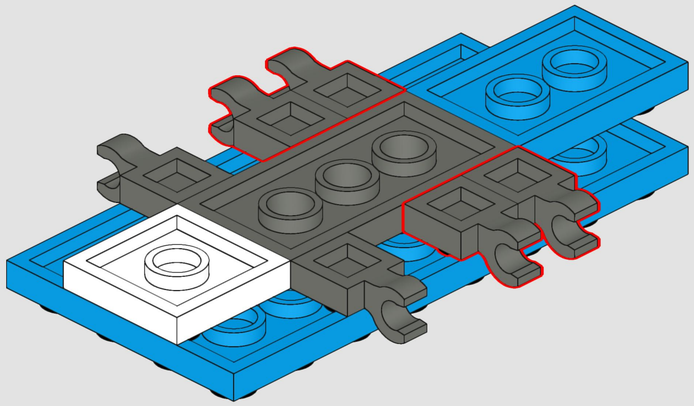

92

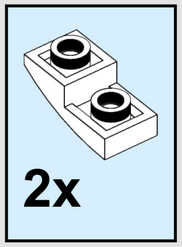

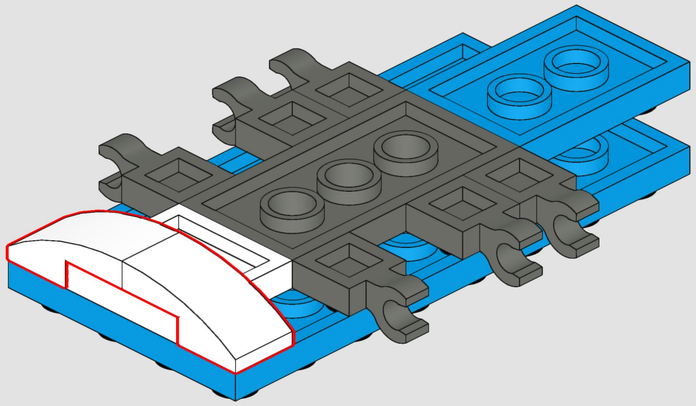

93

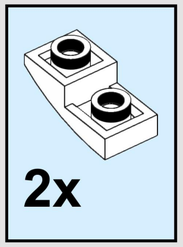

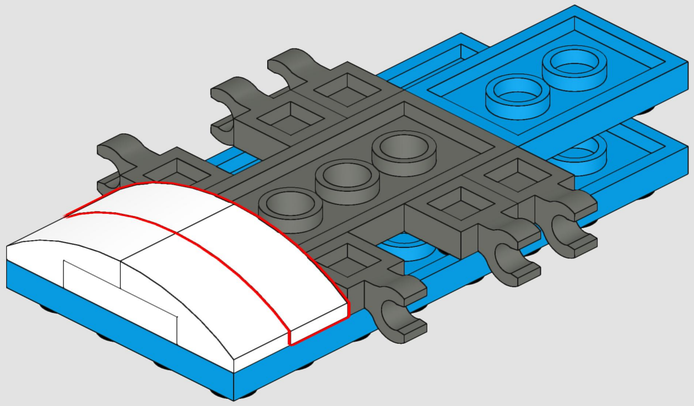

94

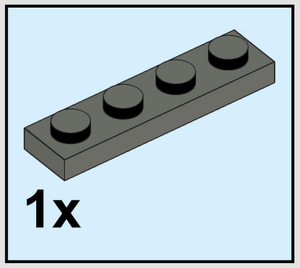

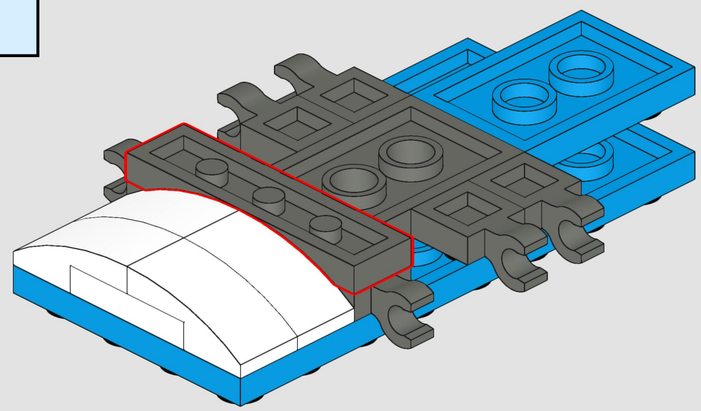

95

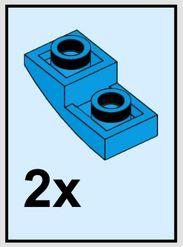

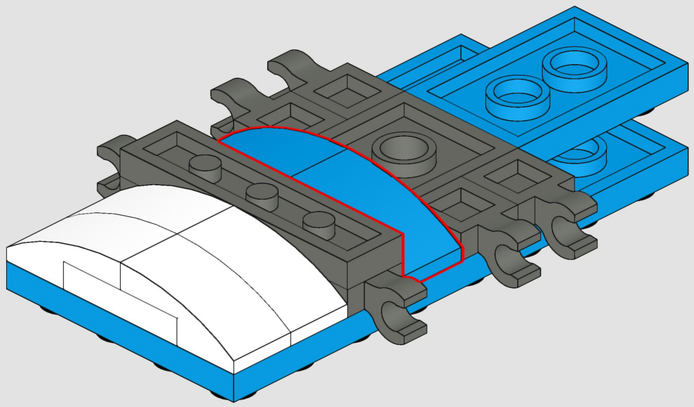

96

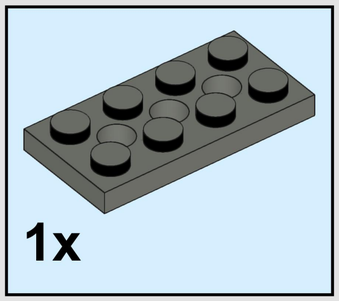

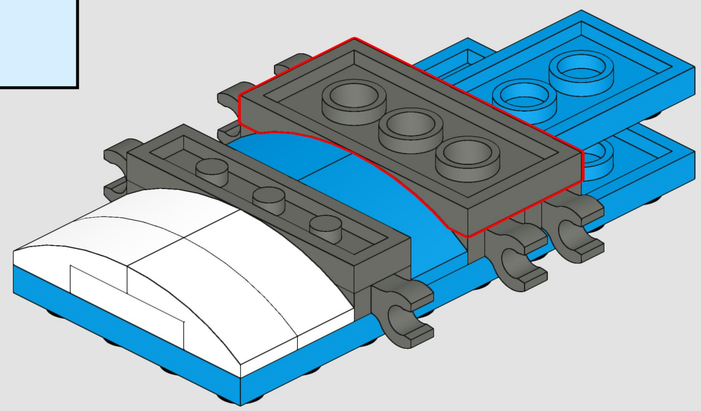

97

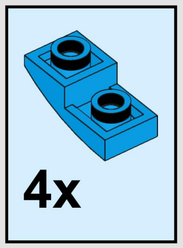

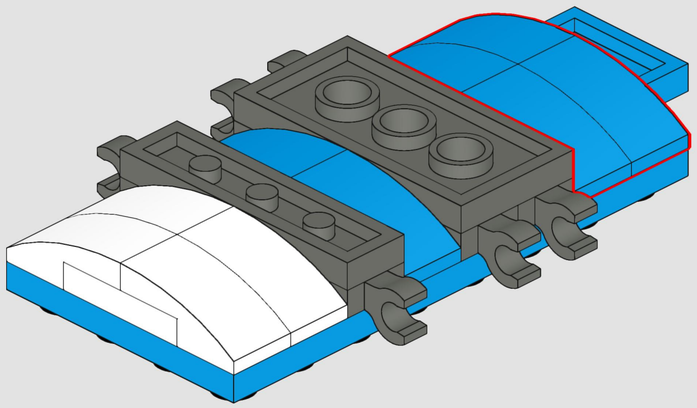

98

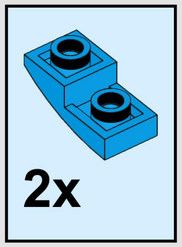

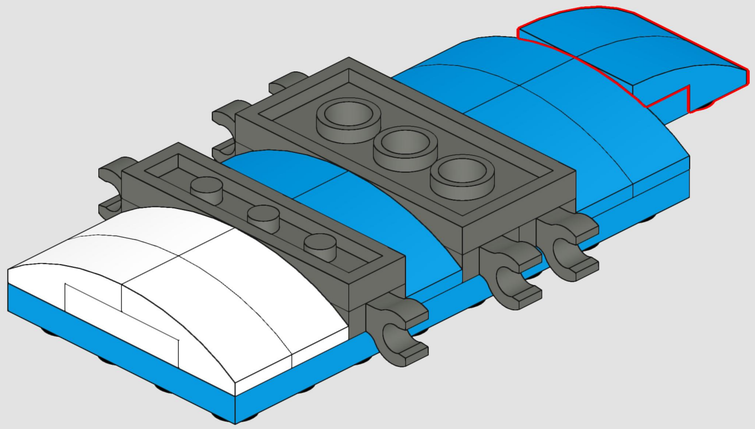

99

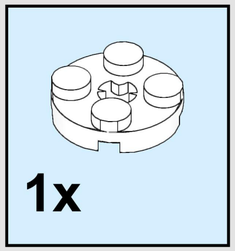

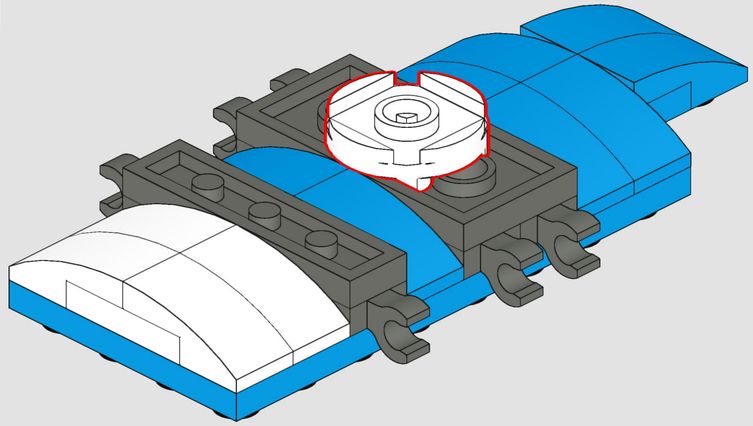

100

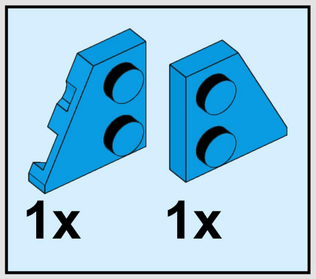

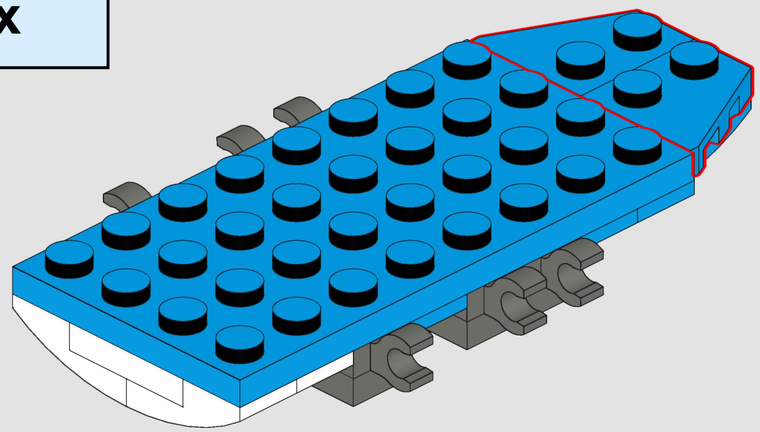

101

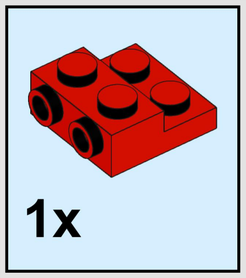

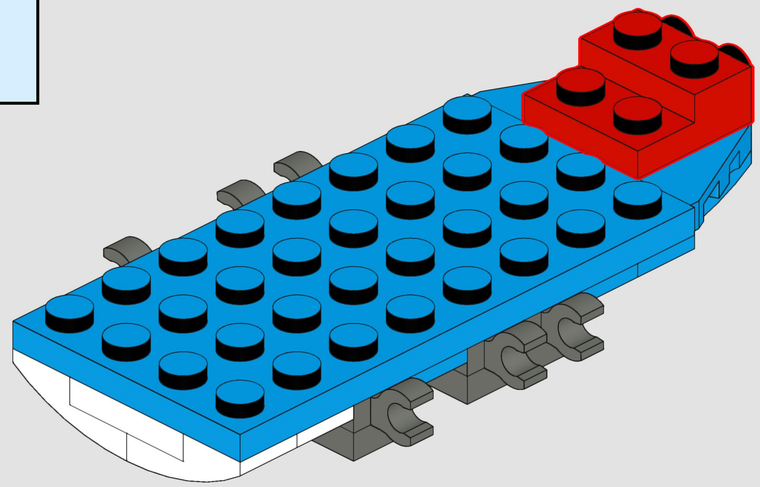

102

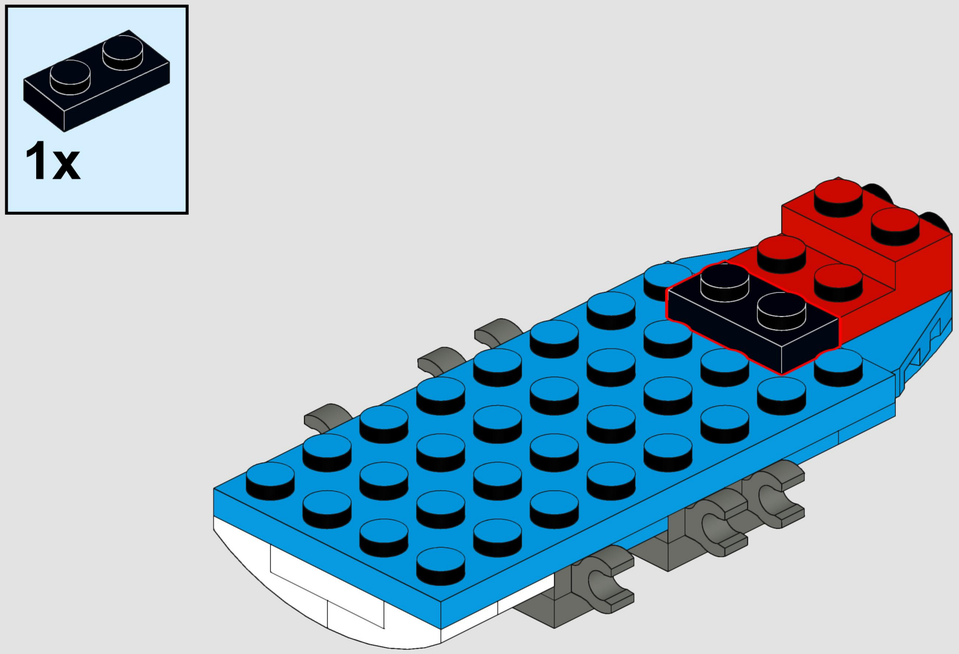

103

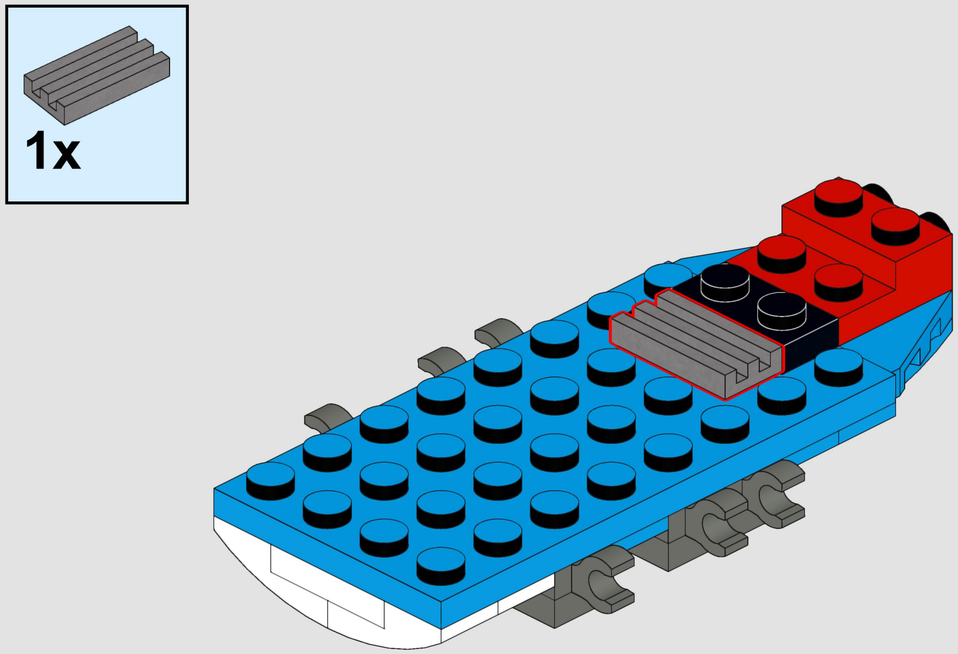

104

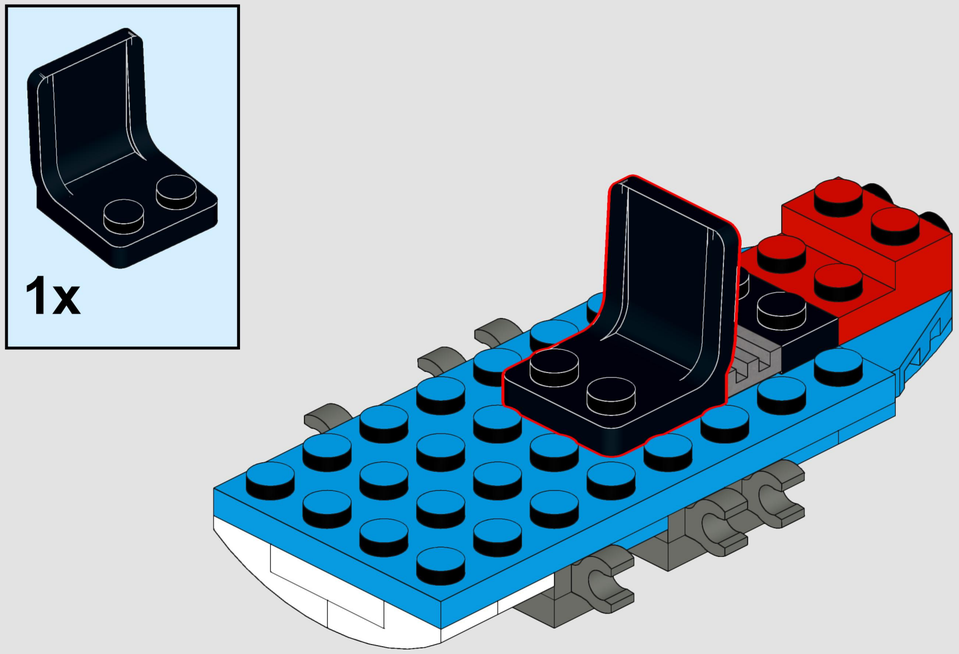

105

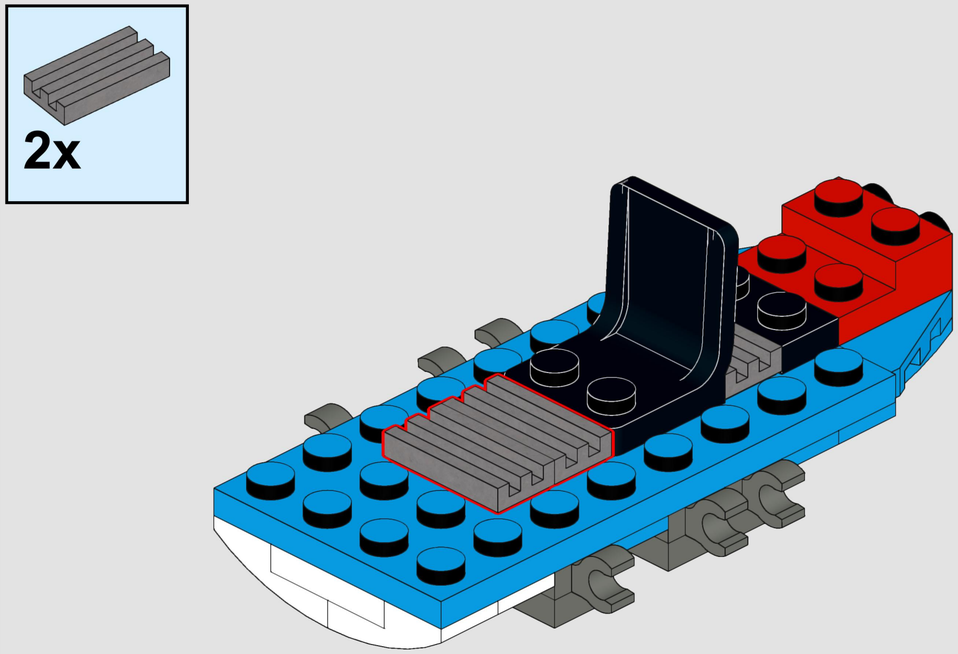

106

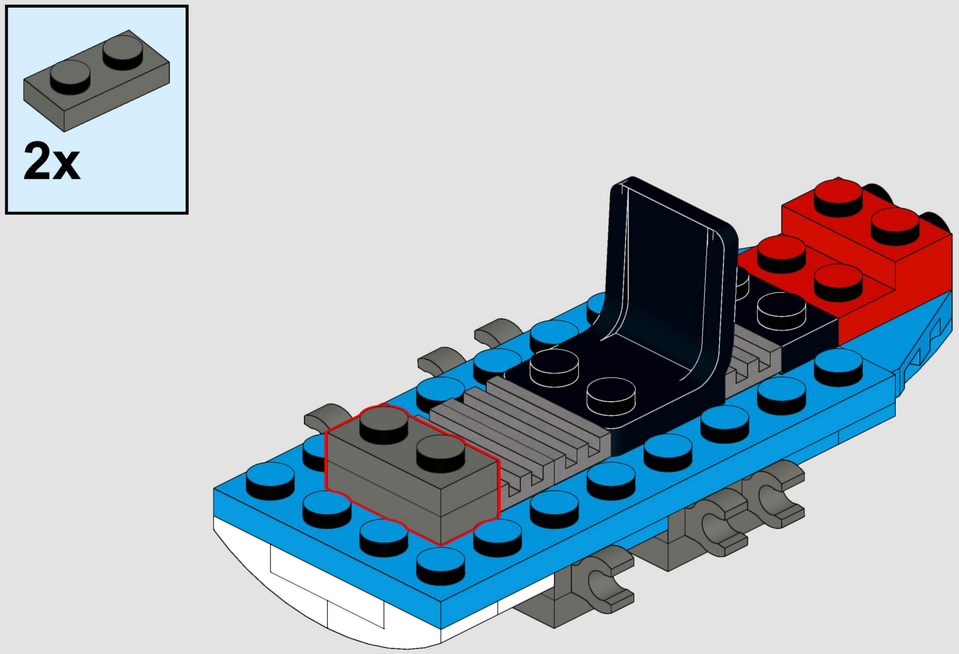

107

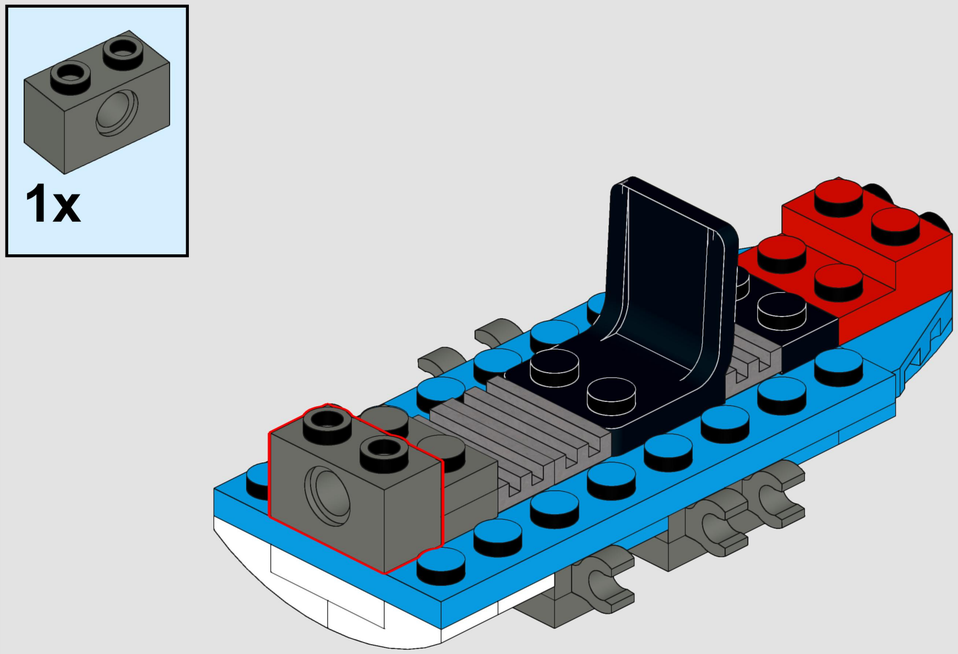

108

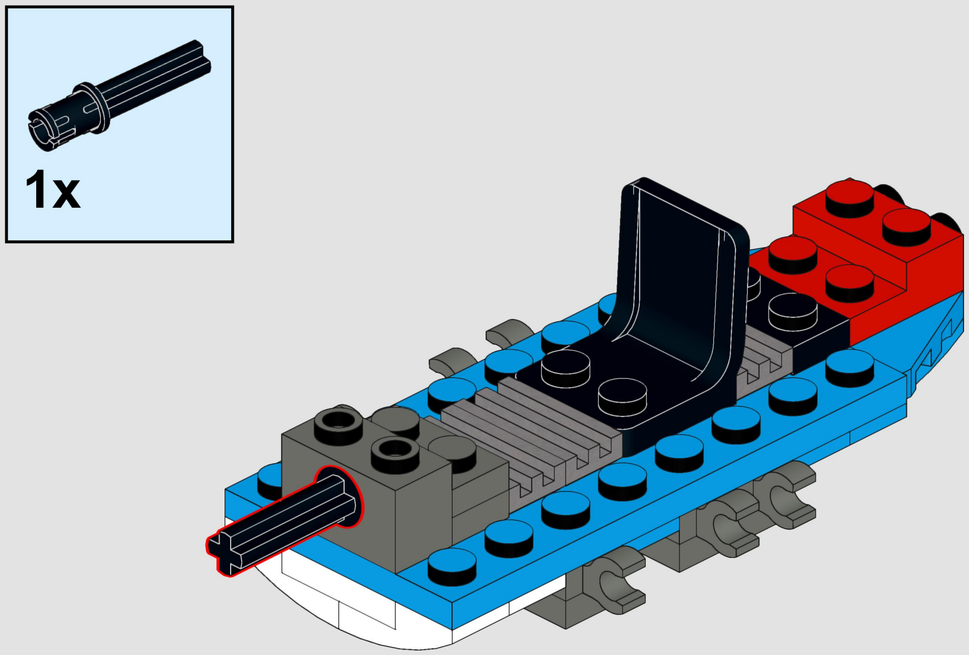

109

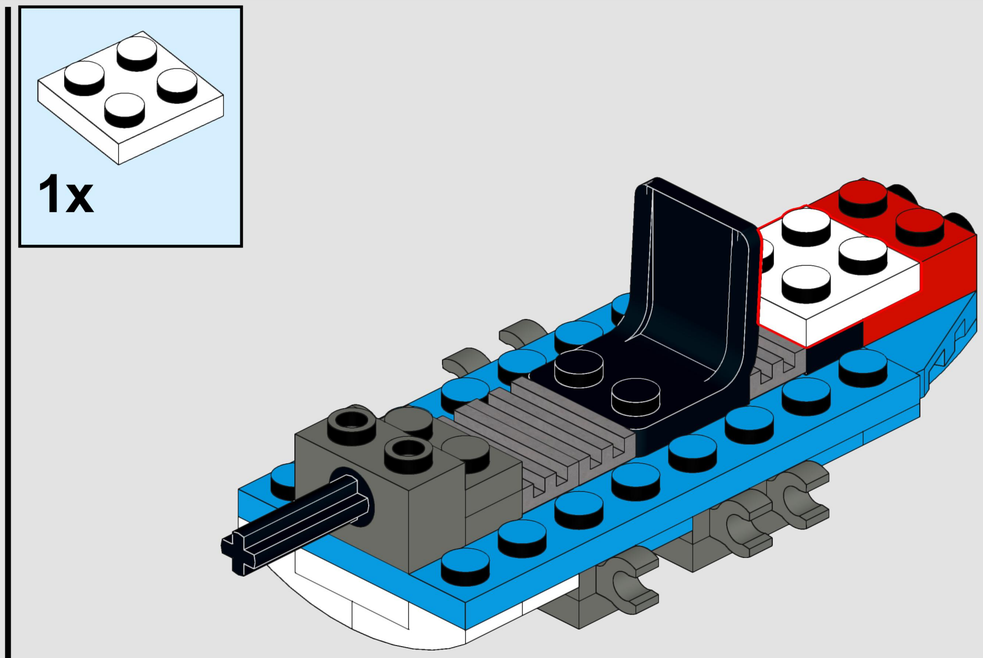

110

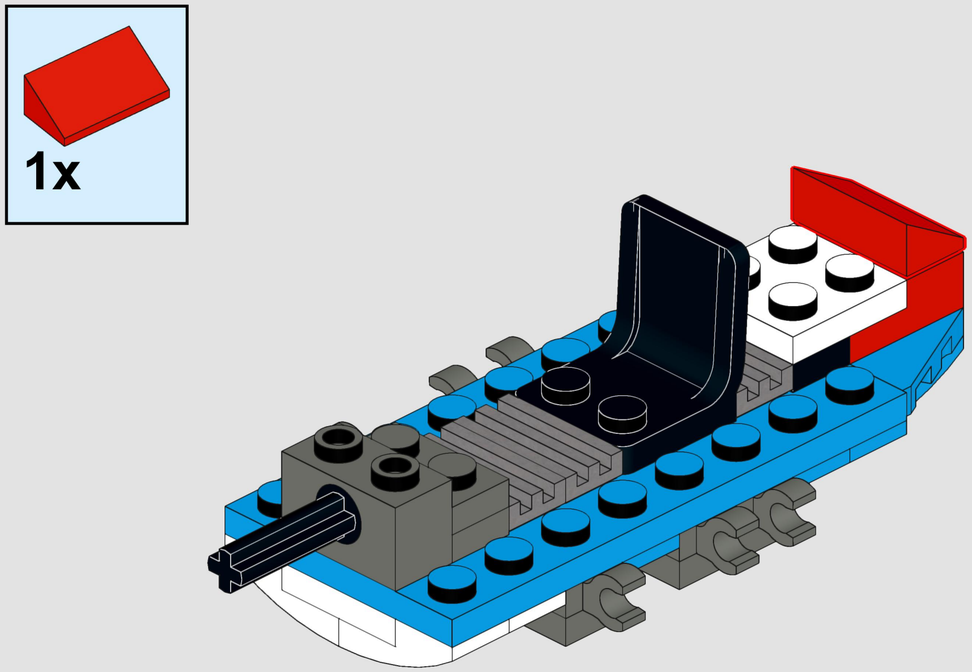

111

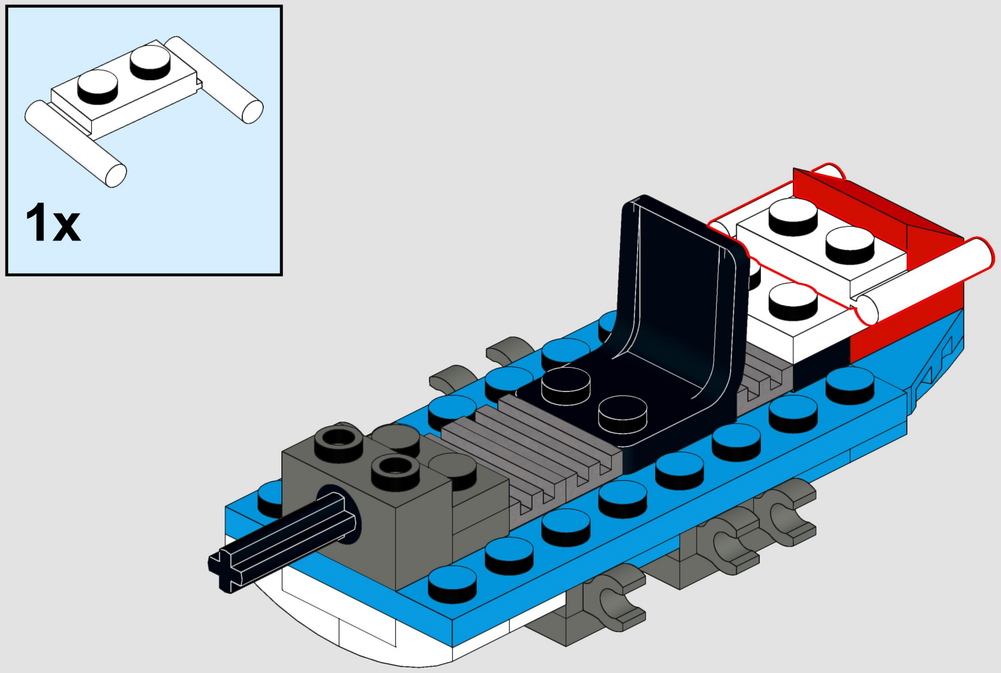

112

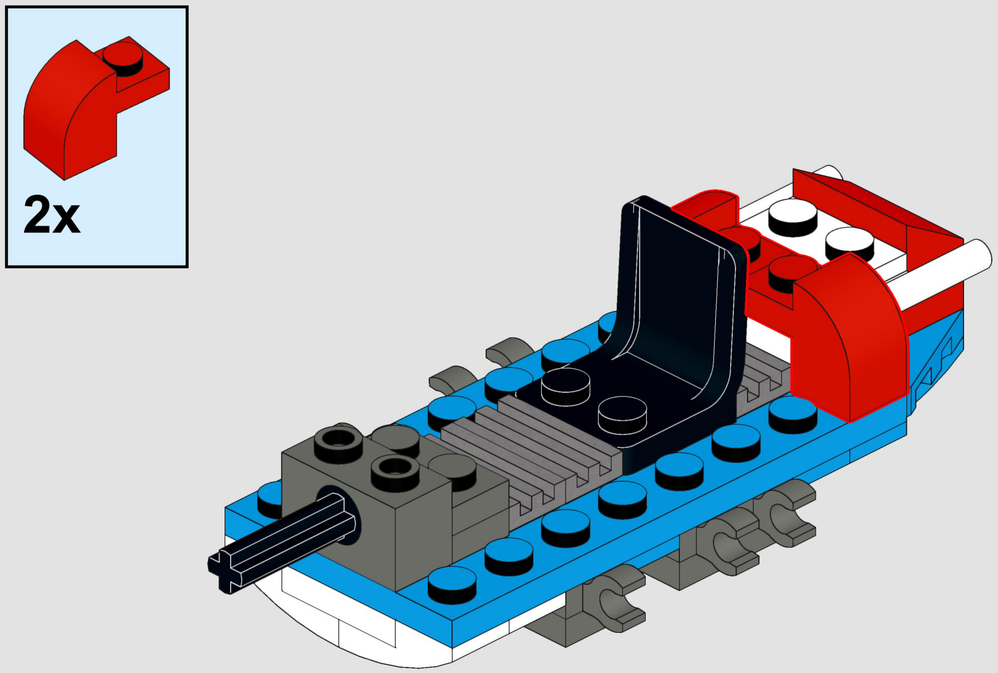

113

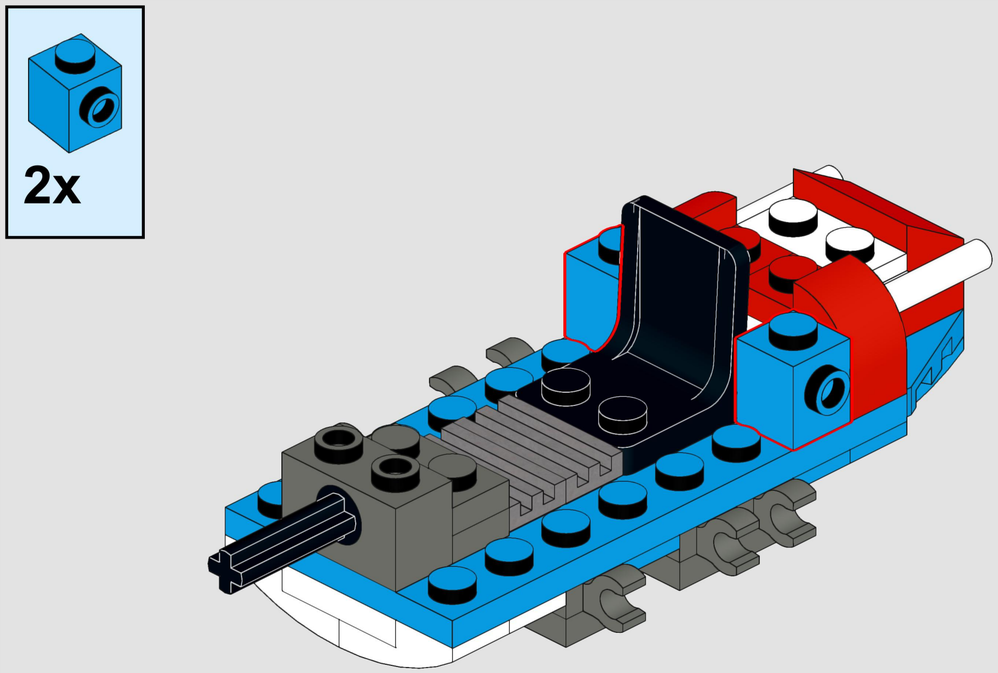

114

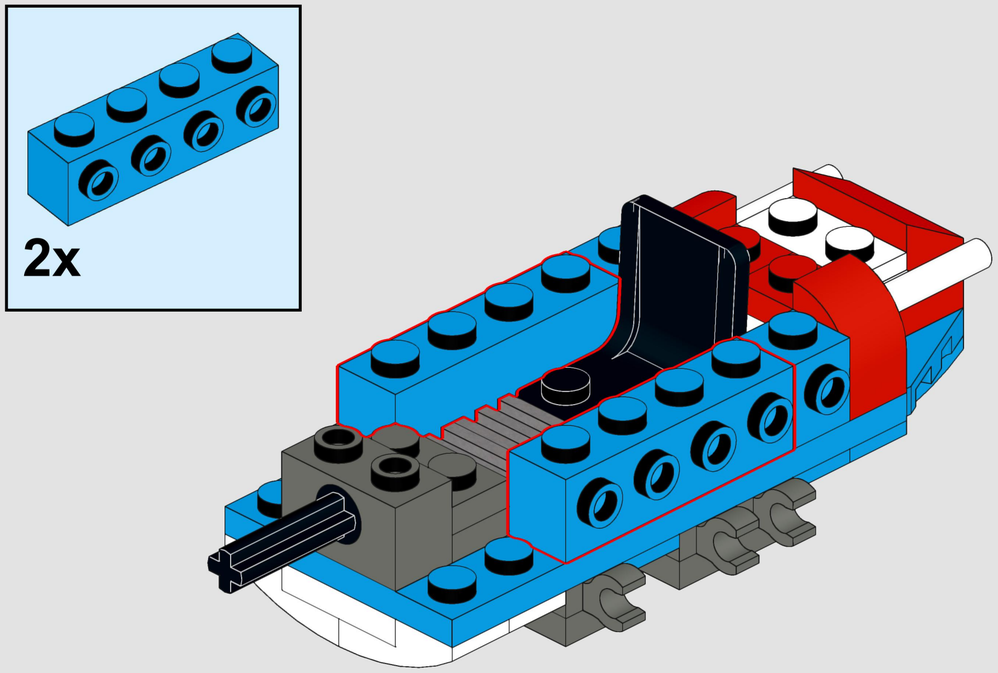

115

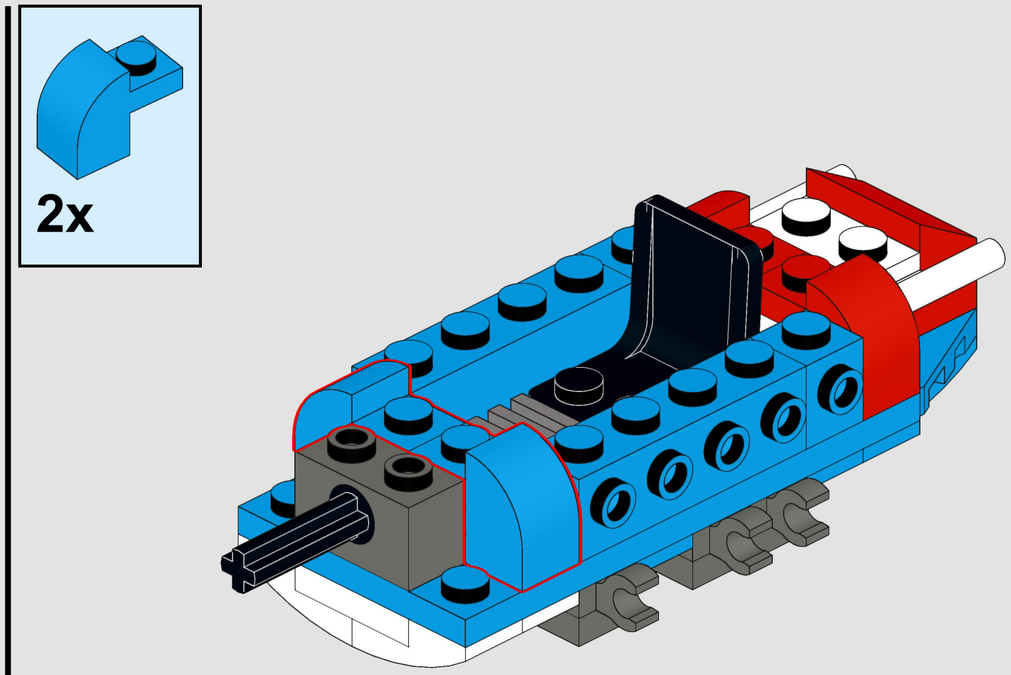

116

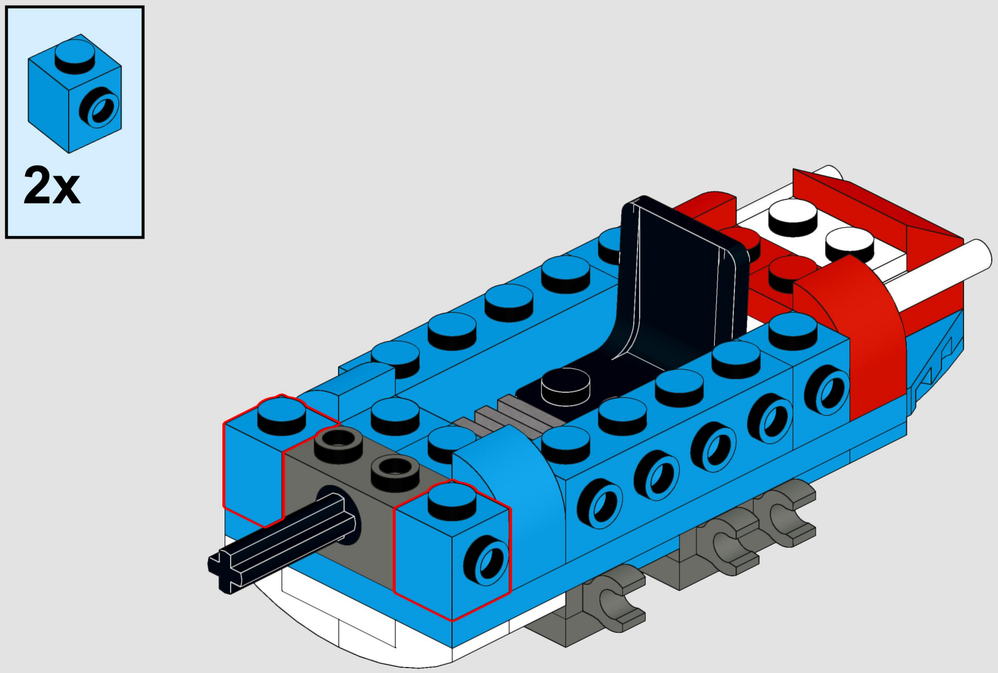

117

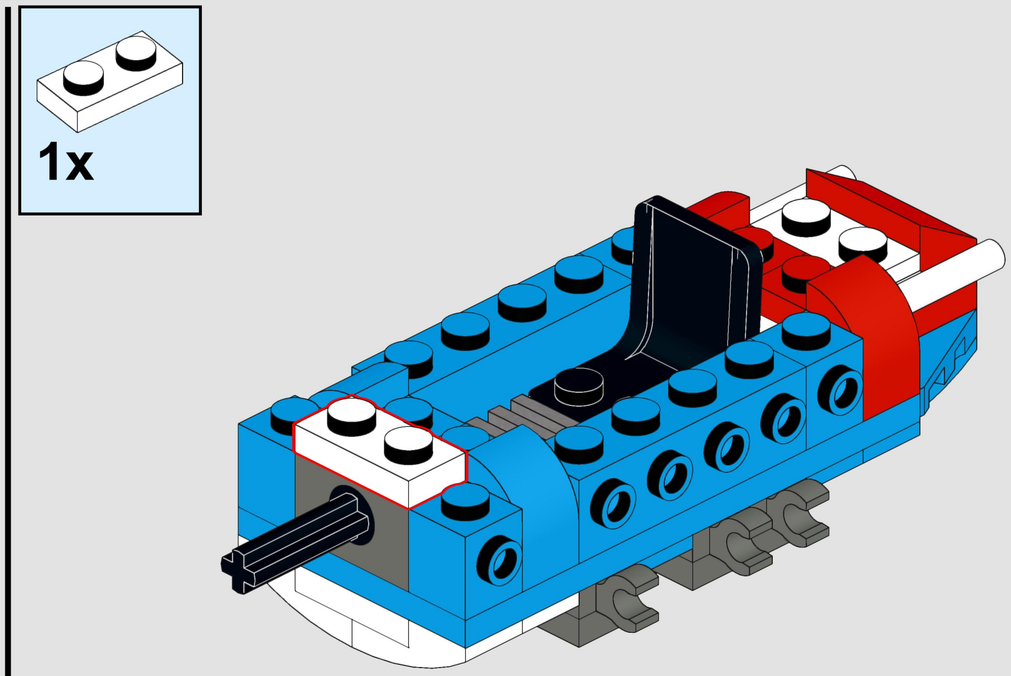

118

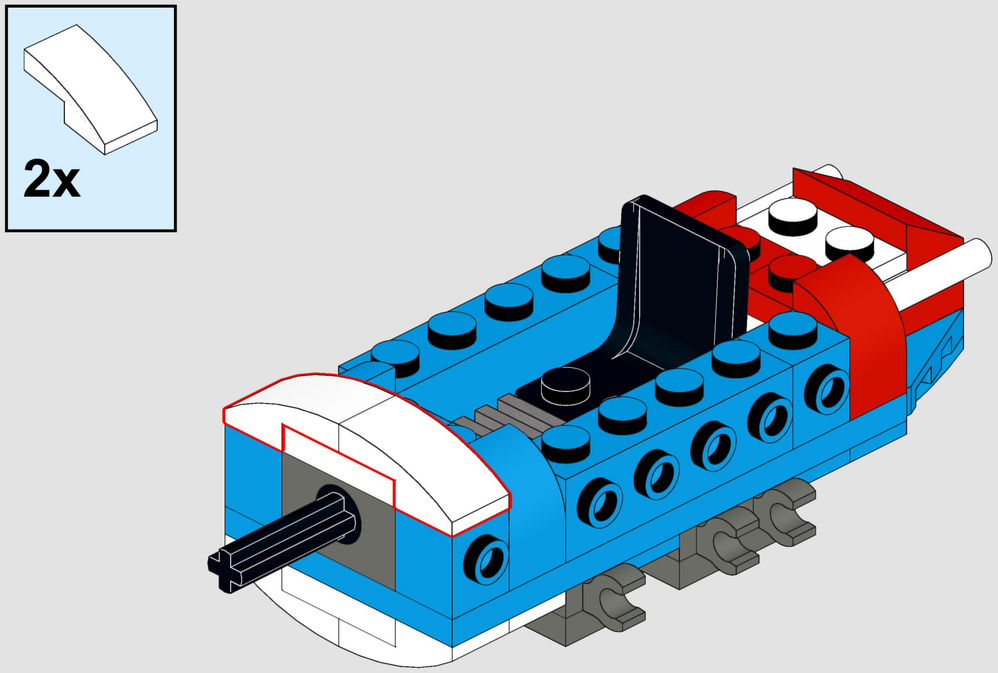

119

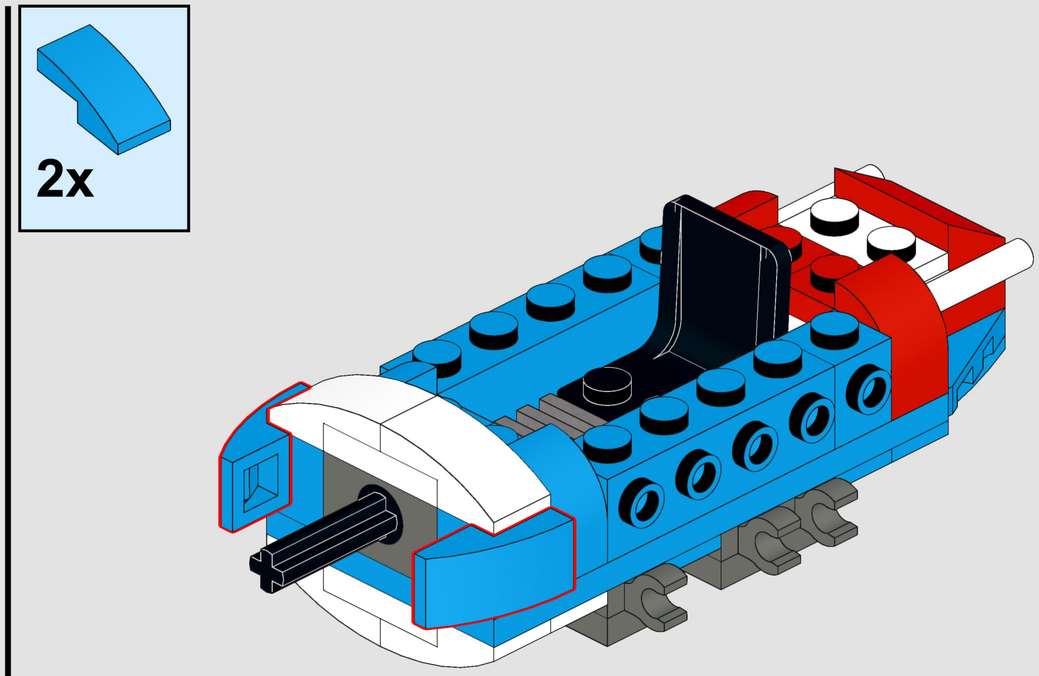

120

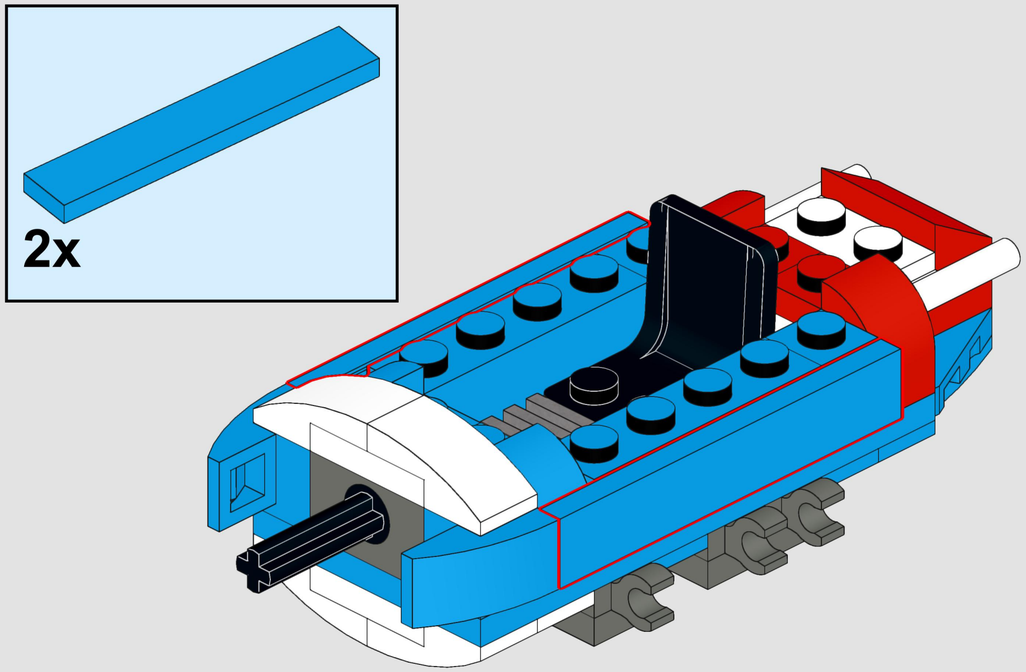

121

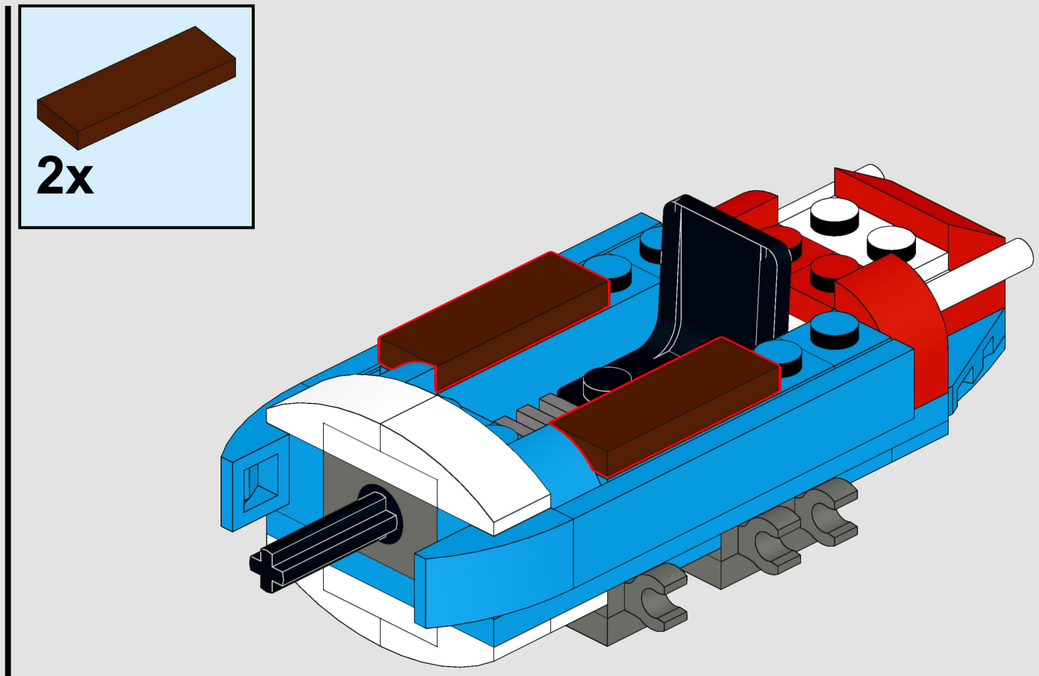

122

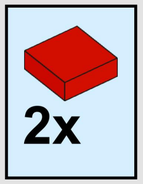

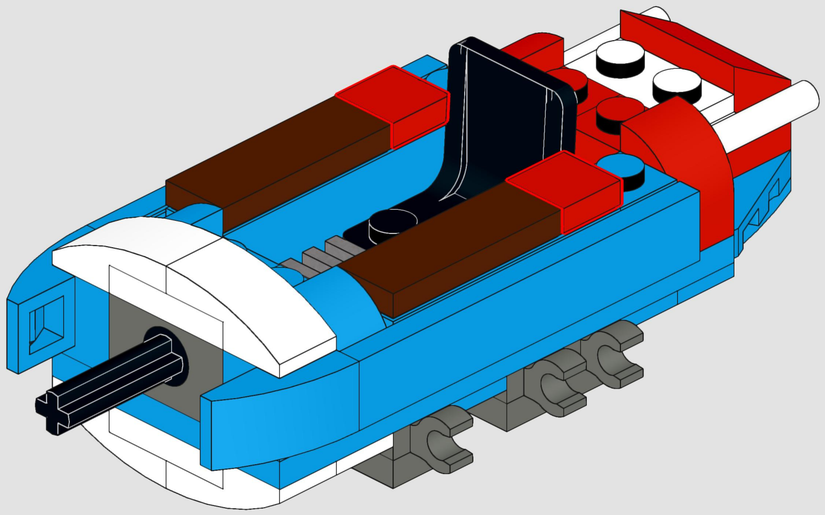

123

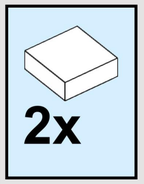

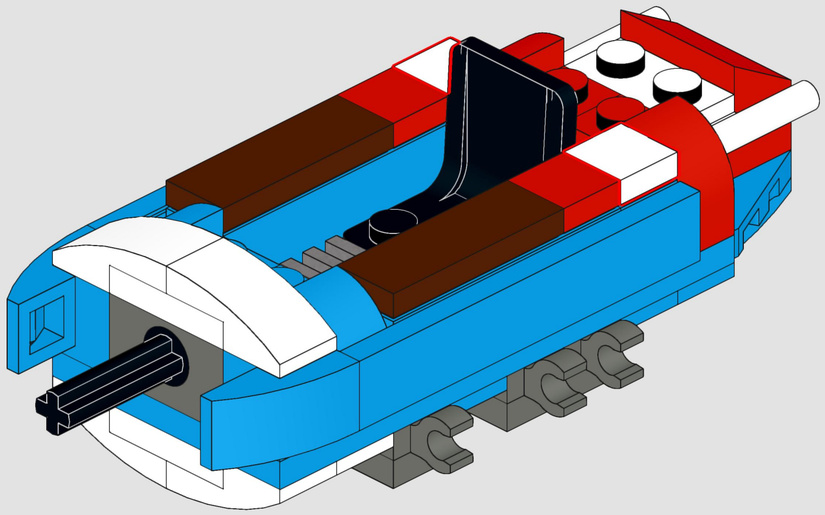

124

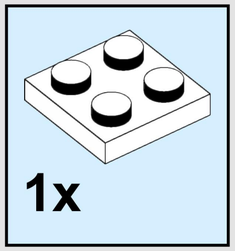

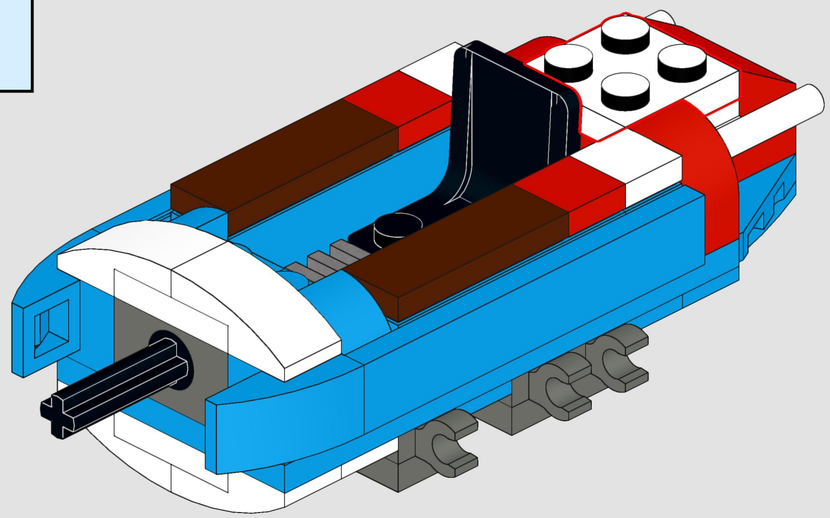

125

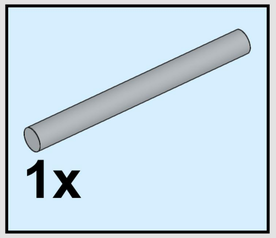

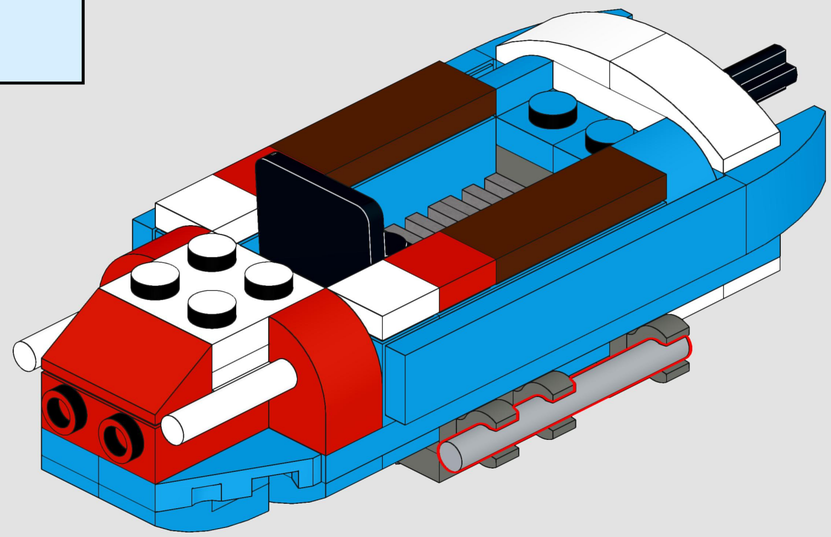

126

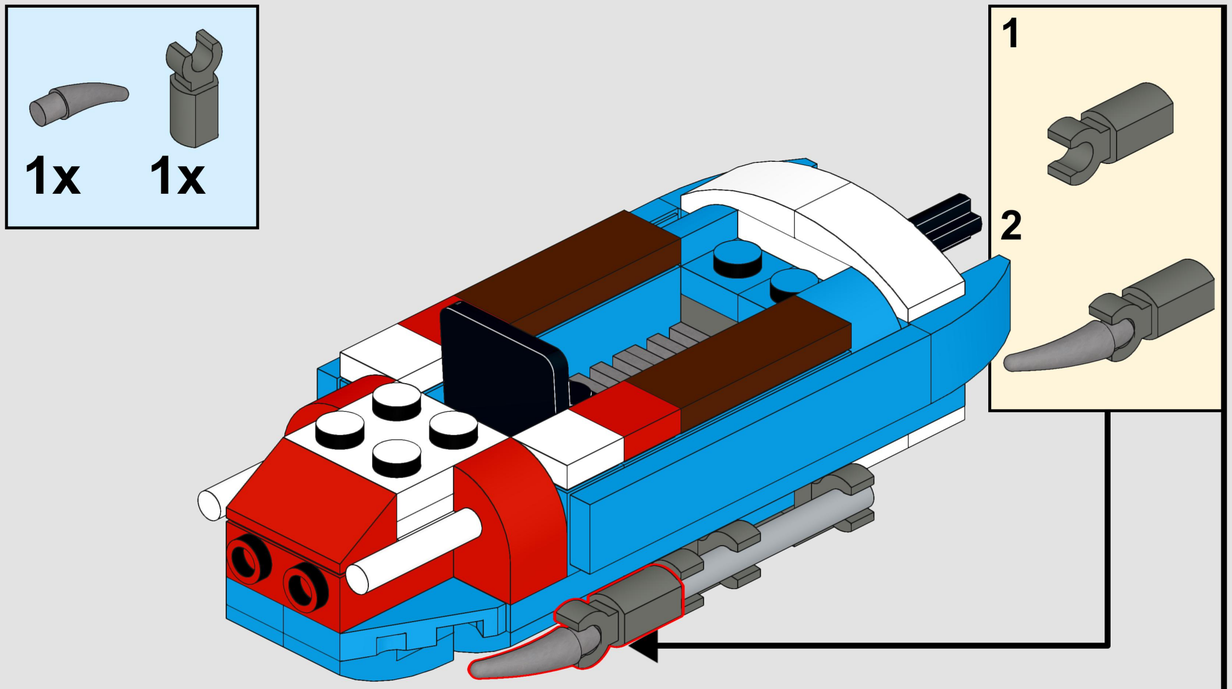

127

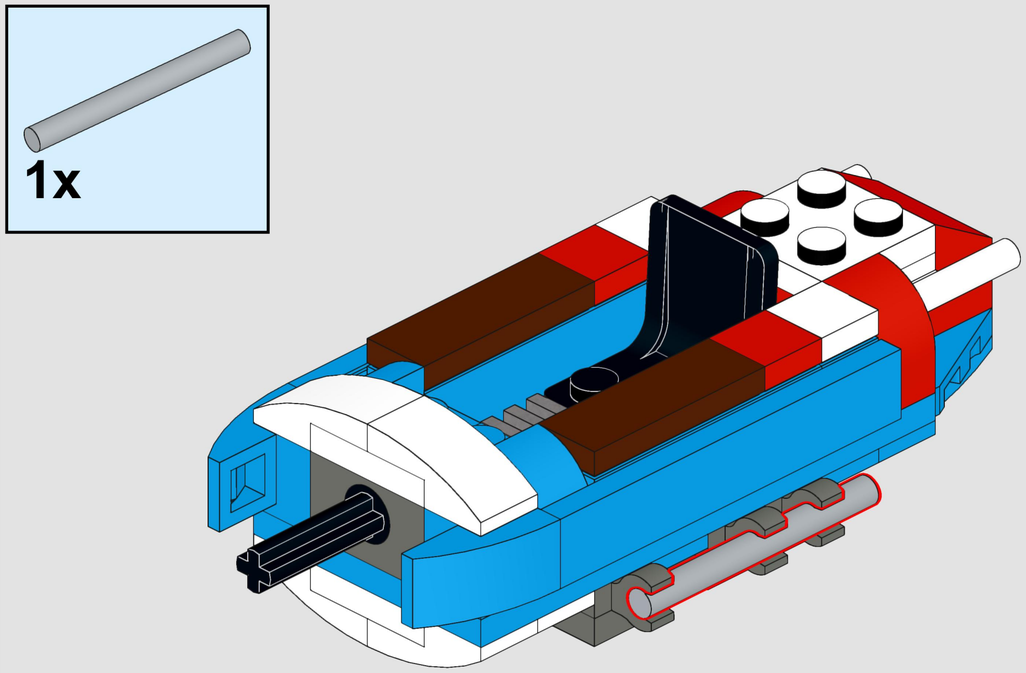

128

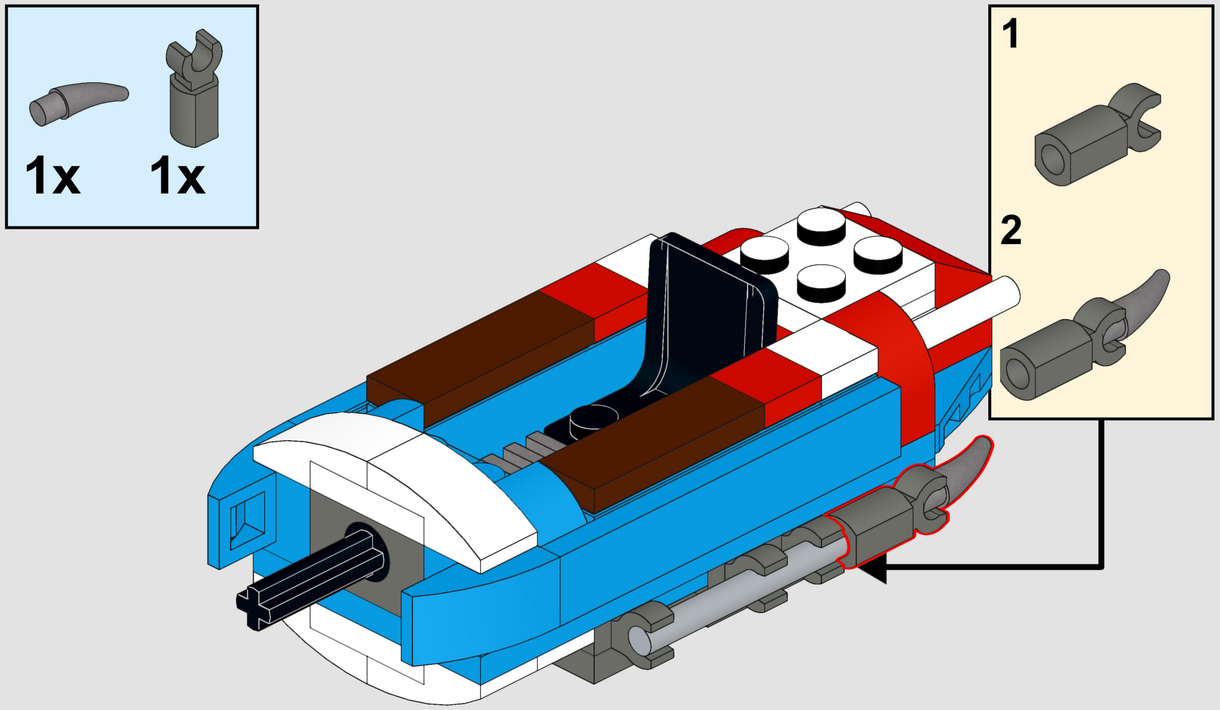

129

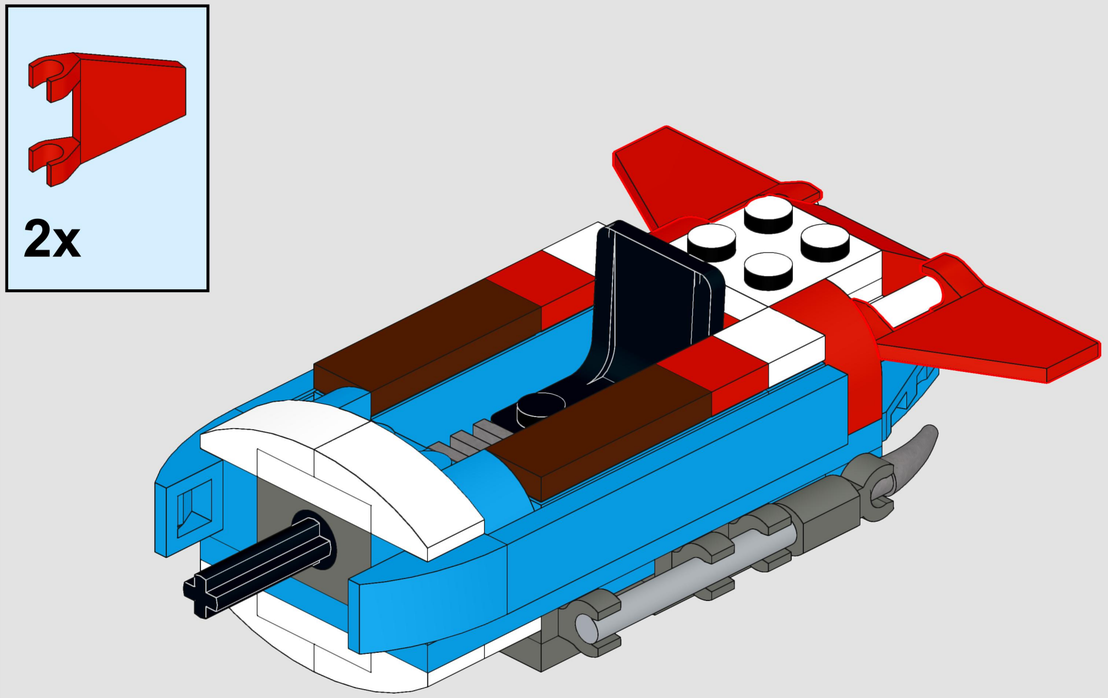

130

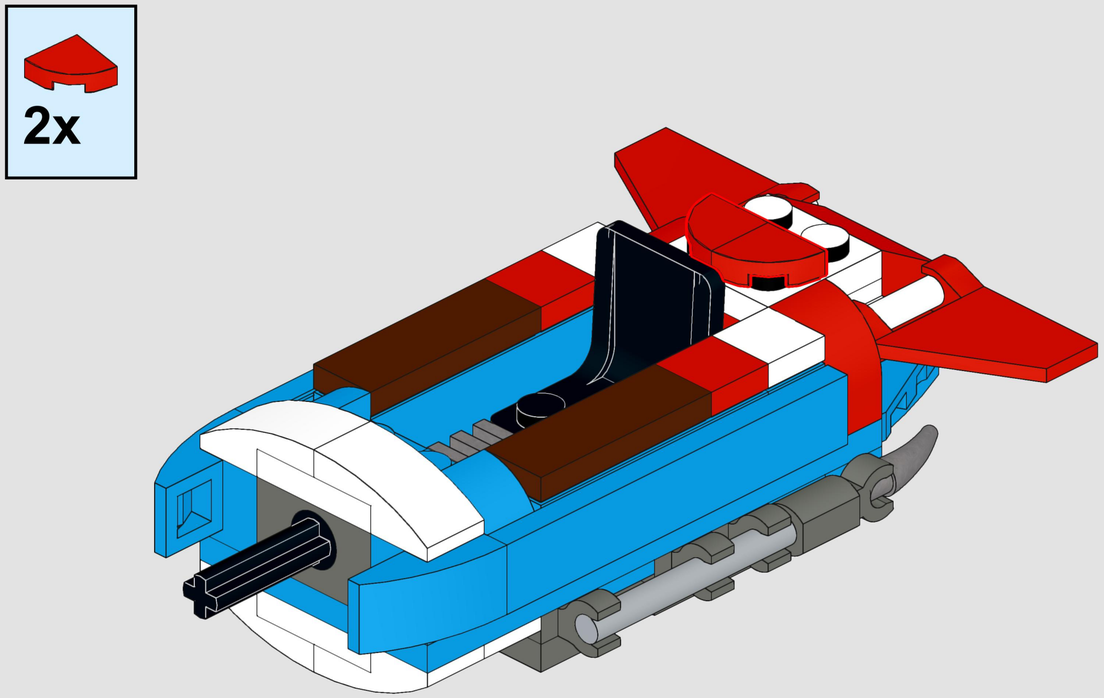

131

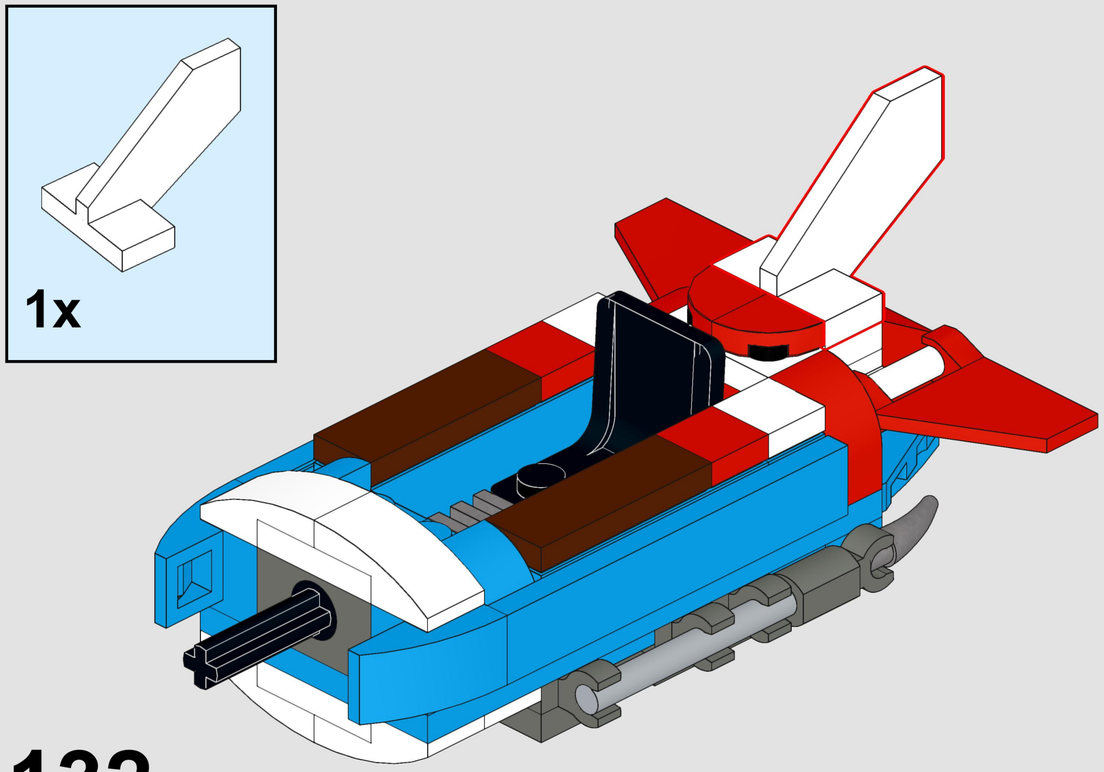

132

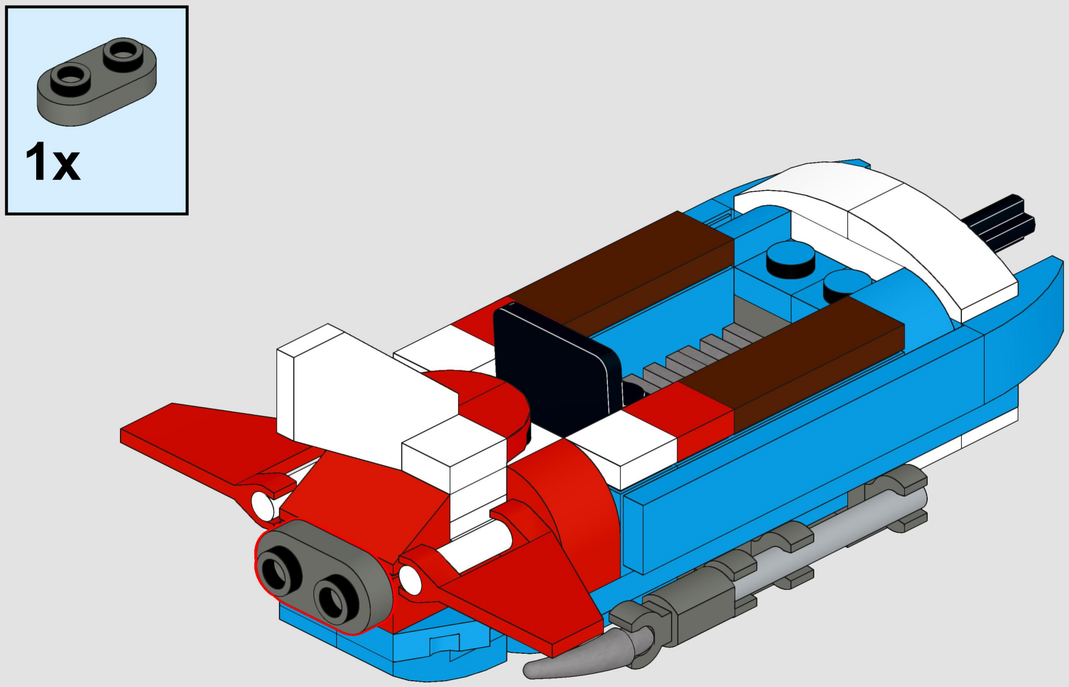

133

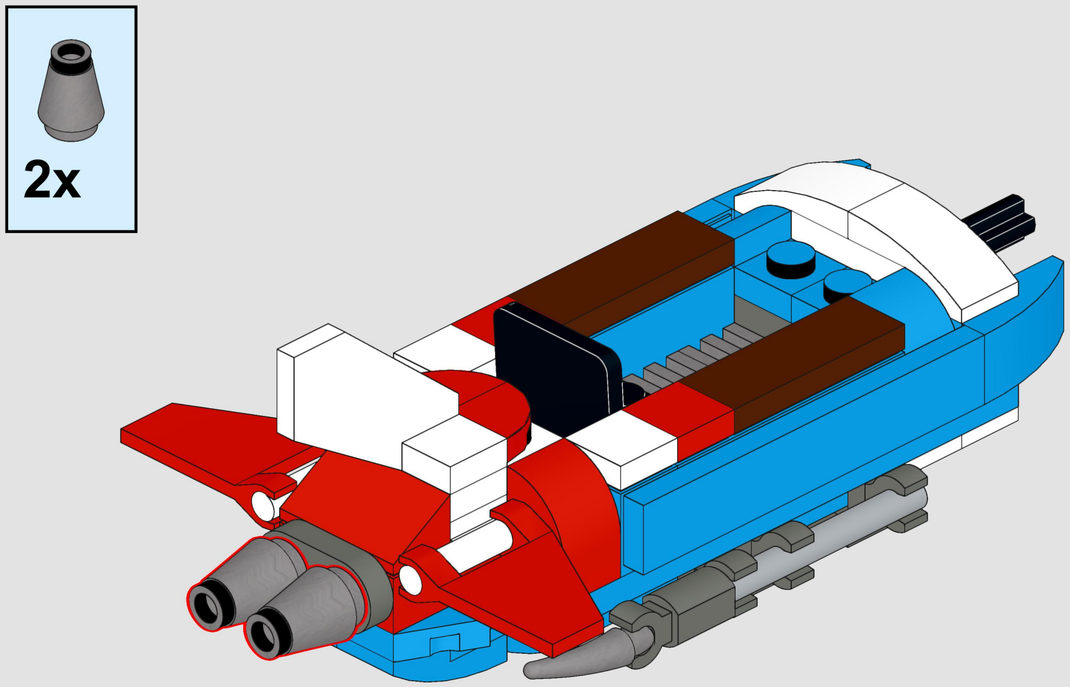

134

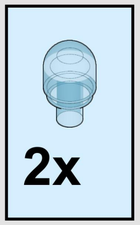
2x

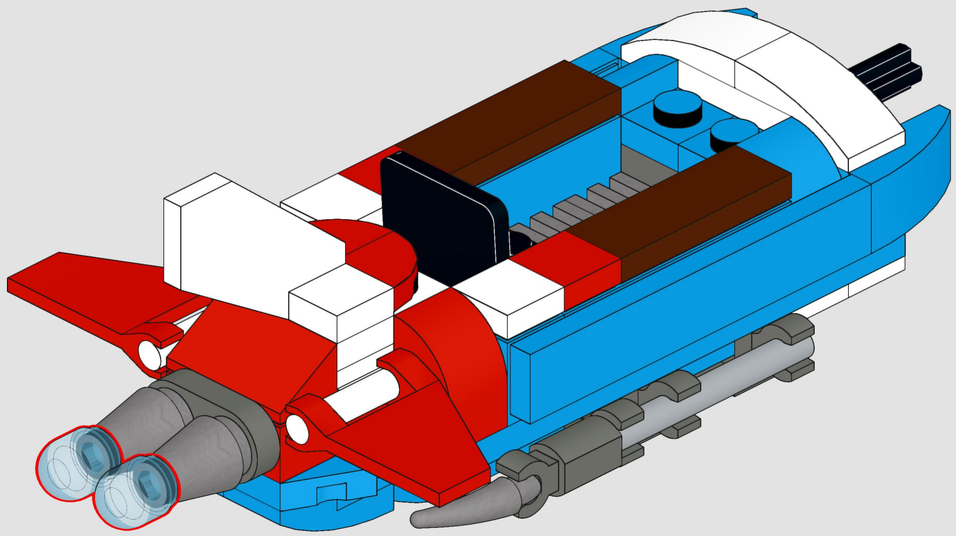

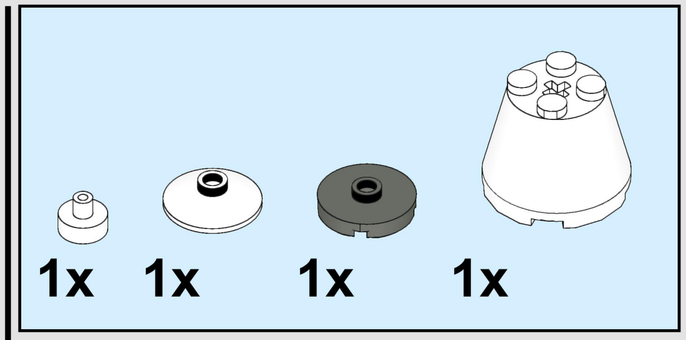
1x
1x
1x
1x

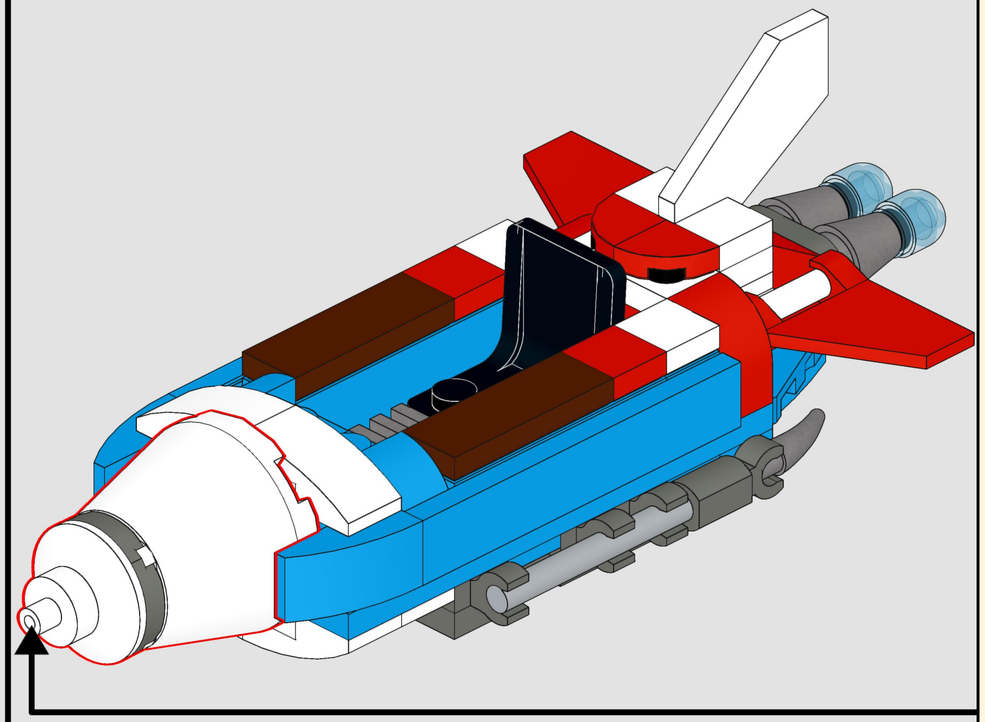

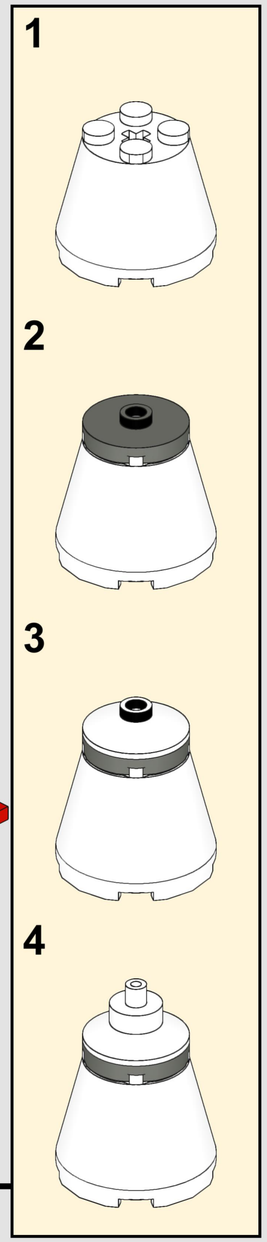
1
2
3
4

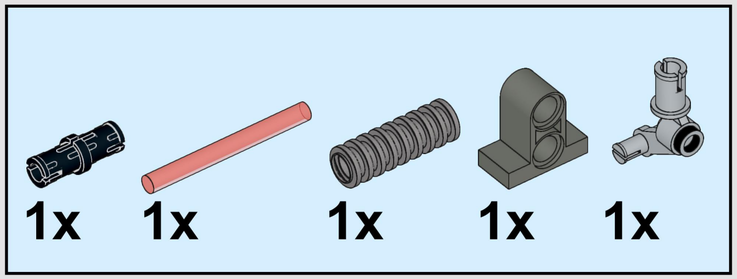

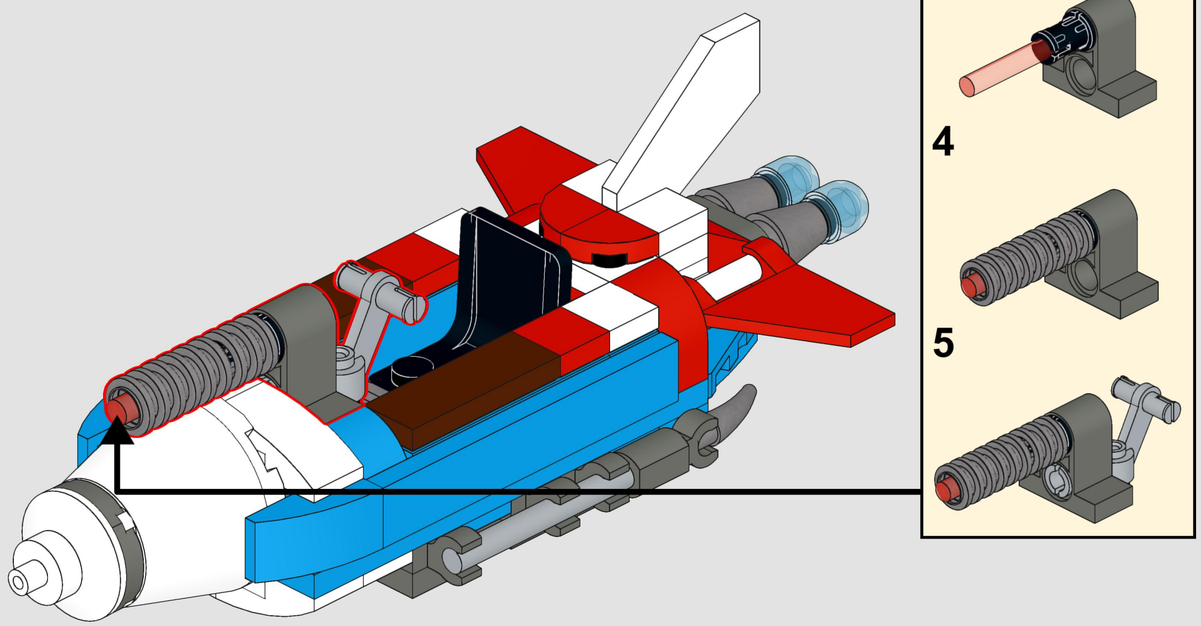

137

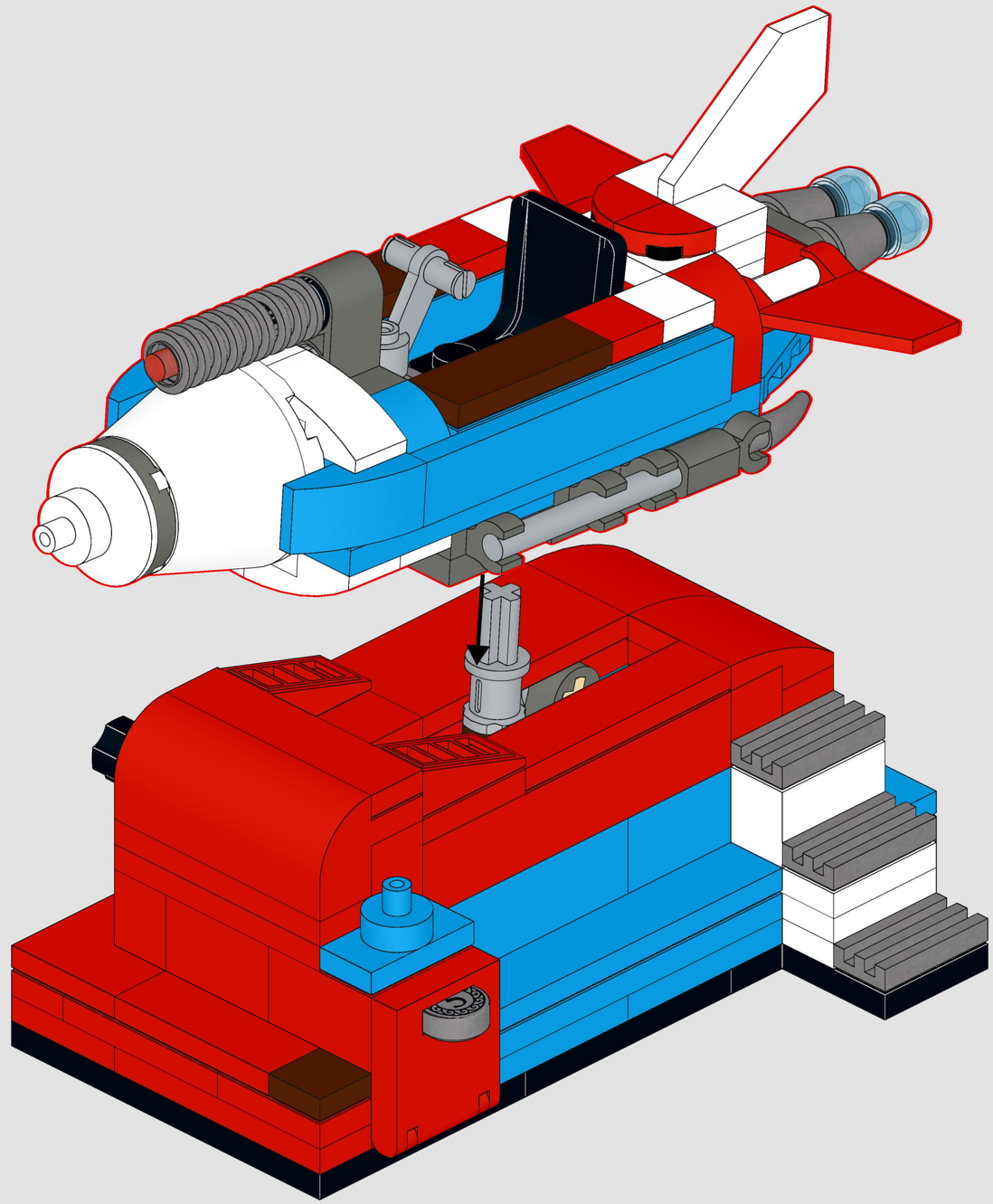

138

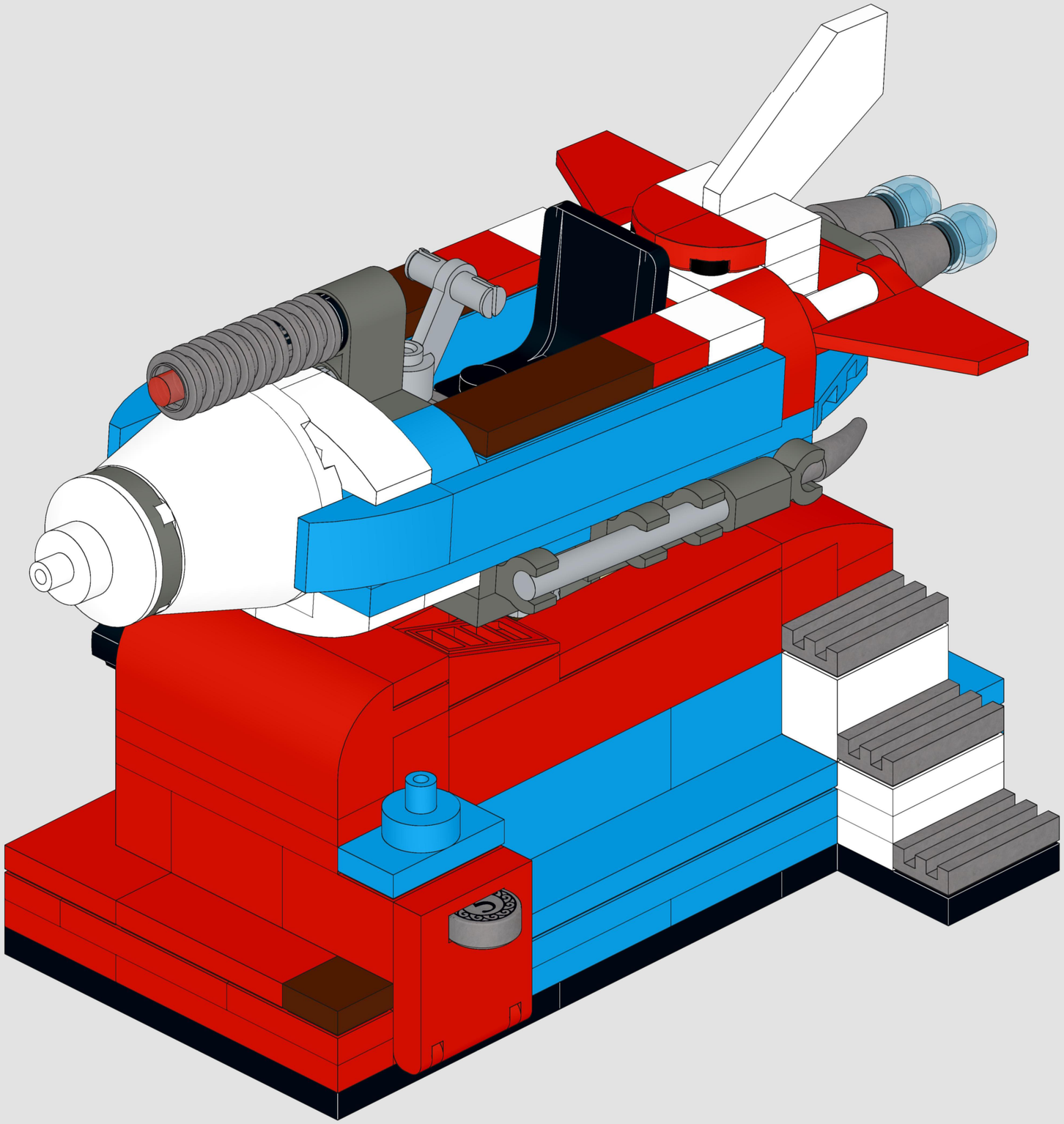

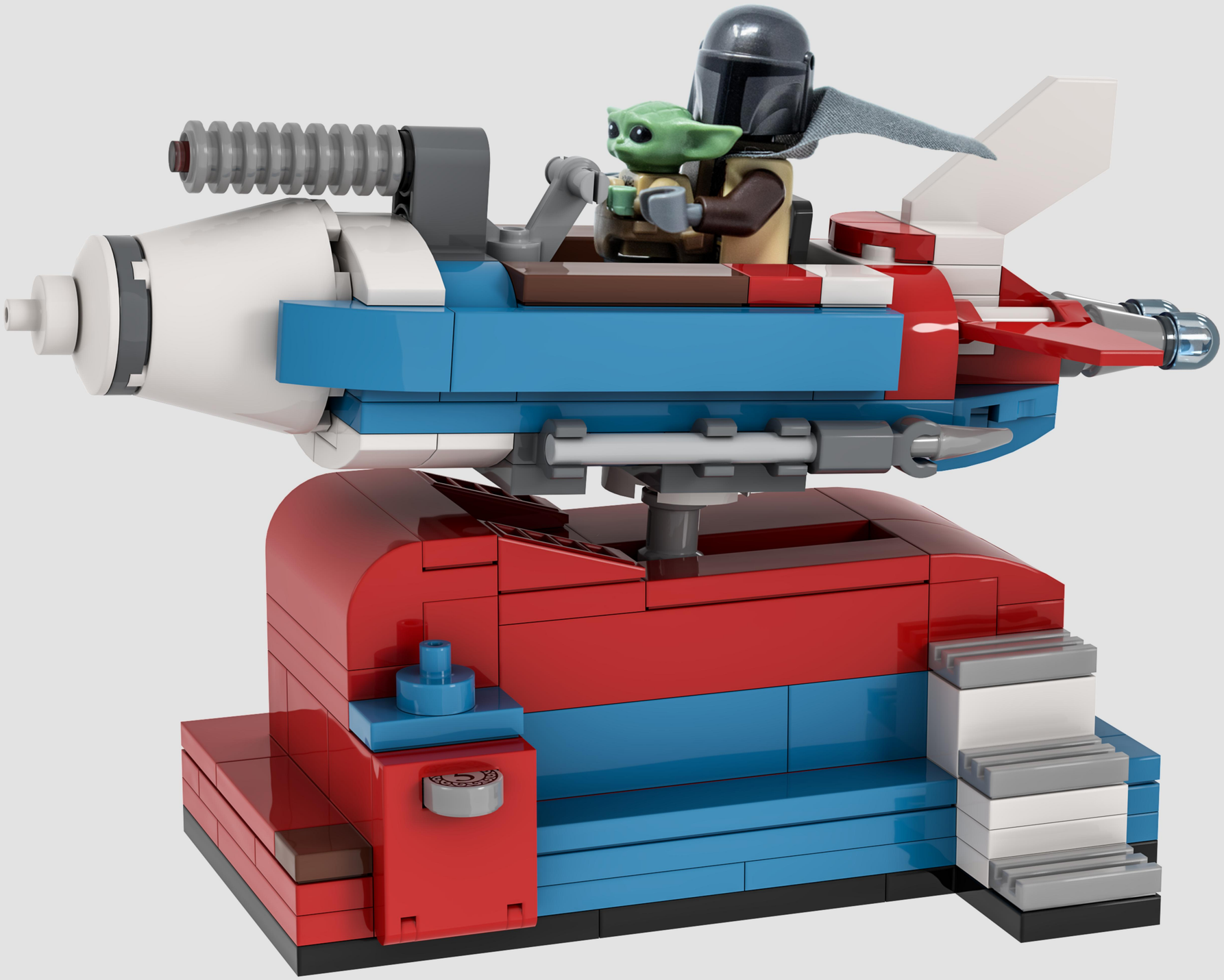

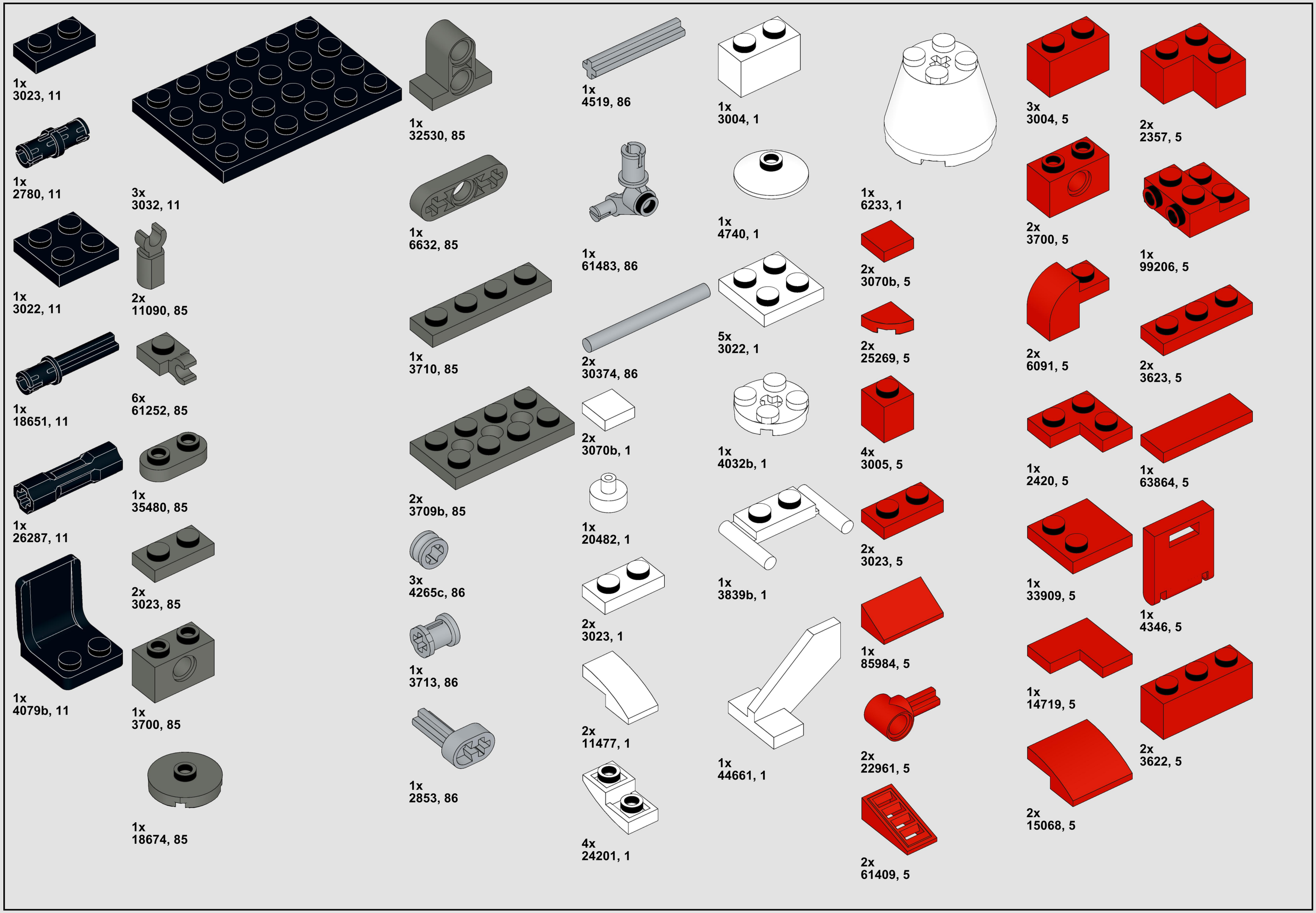
1x 3023, 11
1x 2780, 11
1x 3022, 11
1x 18651, 11
1x 26287, 11
1x 4079b, 11
3x 3032, 11
2x 11090, 85
6x 61252, 85
1x 35480, 85
2x 3023, 85
1x 3700, 85
1x 18674, 85
1x 32530, 85
1x 6632, 85
1x 3710, 85
2x 3709b, 85
3x 4265c, 86
1x 3713, 86
1x 2853, 86
1x 4519, 86
1x 61483, 86
2x 30374, 86
2x 3070b, 1
1x 20482, 1
2x 3023, 1
2x 11477, 1
4x 24201, 1
1x 3004, 1
1x 4740, 1
5x 3022, 1
1x 4032b, 1
1x 3839b, 1
1x 44661, 1
1x 6233, 1
2x 3070b, 5
2x 25269, 5
4x 3005, 5
2x 3023, 5
1x 85984, 5
2x 22961, 5
2x 61409, 5
3x 3004, 5
2x 3700, 5
2x 6091, 5
1x 2420, 5
1x 33909, 5
1x 14719, 5
2x 15068, 5
2x 2357, 5
1x 99206, 5
2x 3623, 5
1x 63864, 5
1x 4346, 5
2x 3622, 5

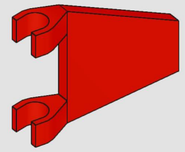
2x
44676, 5

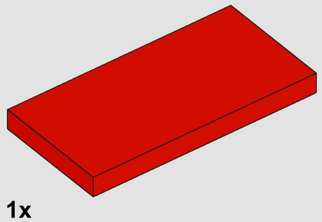
1x
87079, 5

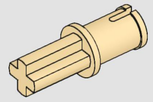
2x
3749, 2

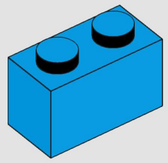
1x
3004, 153

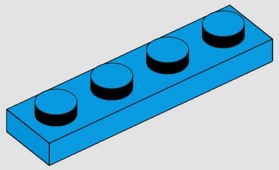
2x
3710, 153

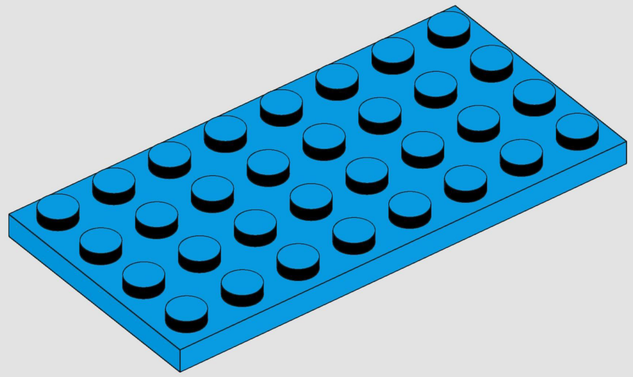
1x
3035, 153

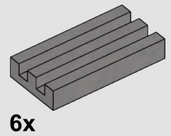
6x
2412b, 95

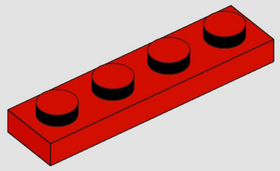
4x
3710, 5

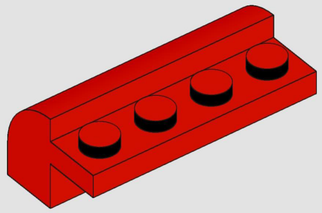
1x
6081, 5

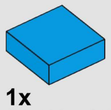
1x
3070b, 153

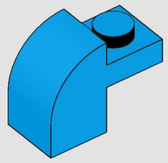
2x
6091, 153

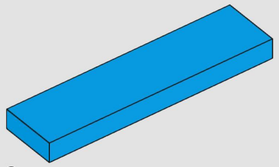
2x
2431, 153

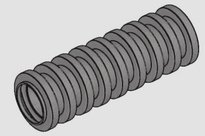
1x
78c03, 95

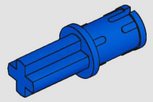
1x
43093, 7

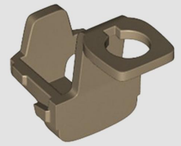
1x
37822, 69

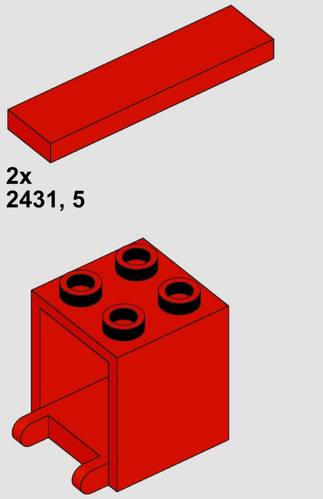
1x
4345, 5

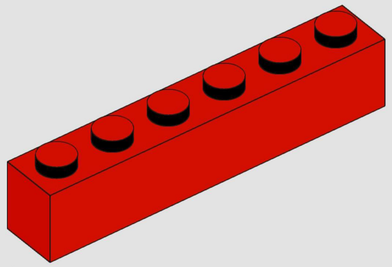
2x
3009, 5

4x
87087, 153

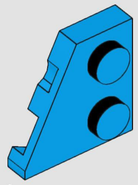
1x
24299, 153

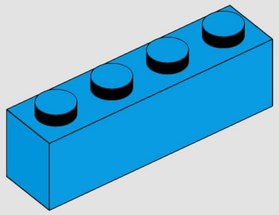
1x
3010, 153

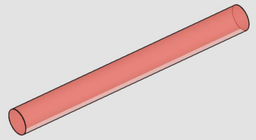
1x
30374, 17

1x
sw1113

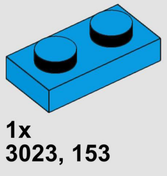
1x
3023, 153

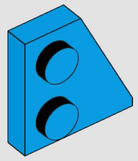
1x
24307, 153

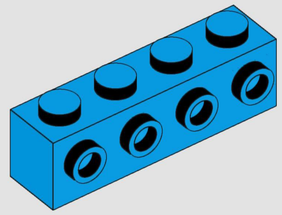
2x
30414, 153

2x
58176, 74

1x
sw1057

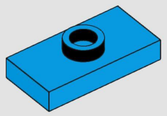
1x
15573, 153

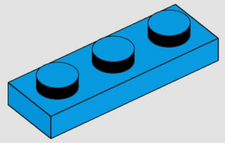
1x
3623, 153

4x
98138pb023, 95

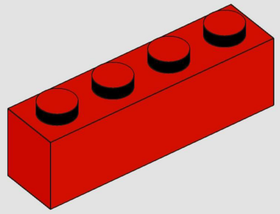
3x
3010, 5

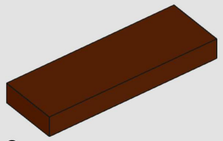
2x
63864, 88

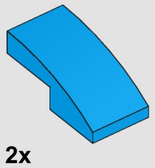
2x
11477, 153

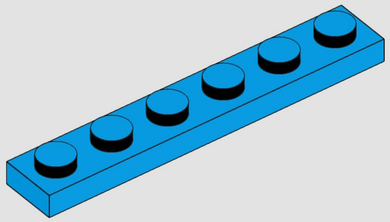
5x
3666, 153

2x
53451, 95

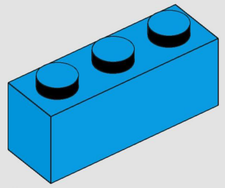
2x
3622, 153

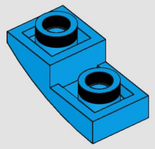
8x
24201, 153

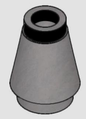
2x
4589b, 95

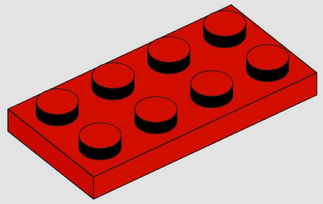
1x
3020, 5

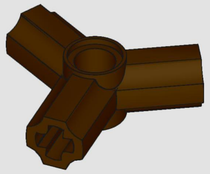
1x
10288, 120

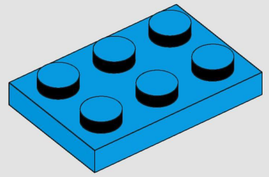
1x
3021, 153

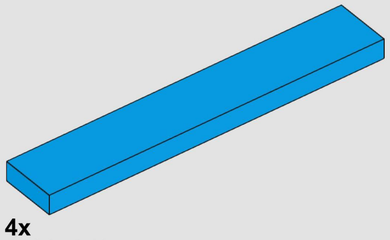
4x
6636, 153

IMAGE CREDITS

Wookieenutz' PS composition of the Mandalorian & the Child riding a coin-operated rocket
https://www.facebook.com/WookieeNutz/photos/a.618205488334559/1713480302140400/

© ALL RIGHTS RESERVED | FORCE OF BRICKS 2020

FORCE OF BRICKS
DAVID STRENZLER
CUSTOM MODEL DESIGNS
WWW.FORCEOFBRICKS.DE
INFO@FORCEOFBRICKS.DE
DESIGN IN BRICKS

© ALL RIGHTS RESERVED | FORCE OF BRICKS 2020